Chapter One

1.0 The notion of collocation

1.1 The aim of this chapter

Given the importance of collocation as indicated in the Introduction, this chapter will review perspectives on collocation as expressed by linguists and lexicographers, discuss major issues related to the study of collocation, and summarize previous studies focusing on collocation.

1.2 Historical background

The notion of 'collocation' has been lightly touched upon in linguistic description since the 18th century. Hester Lynche Piozzi pointed out in her 'British Synonymy' that 'reports are *confirmed,* treaties *ratified,* and affairs *settled*', and that 'the miser is *circumspect,* the saint is *vigilant* and the soldier *watchful.*' (Piozzi 1794, cited in Martin, 1984). Porzig (1934) referred to the phenomenon of 'collocation' as the act of placing together of lexical items and to the combinations of words thus obtained. He argued for recognition of the importance of syntagmatic relations between words such as *bite* and *teeth, bark* and *dog, blond* and *hair.* But it was Firth (1951) who brought the term 'collocation' into prominence as part of the technical terminology of linguistics. He did not particularly define 'collocation' but he applied it to all words or word-groups with which a given word may typically combine. He did not regard collocation of a word as mere juxtaposition, but 'it is an order of mutual expectancy'. Firth argued for recognition of the importance of the company that the word keeps. Using the word 'ass' in different environments, he endeavoured to show that this keeping company, which he called 'collocation',

is part of the meaning of the word; ie. *He is an –, You silly –, Don't be such an –!* Meaning by collocation, according to him, is more explanatory than the conceptual or idea approach to the meaning of words. One of the meanings of 'night' is its collocability with 'dark', and of 'dark', its collocability with 'night' (Firth, 1951:196). In English, 'dark night' refers to no particular stretch of time during the hours of darkness, 'last night' to either a short initial segment, evening, or the whole stretch, and 'first night' to an event, a première, which takes place during the initial segment of the hours of darkness (Ivir, 1988:44).

However, the term 'collocation' was not originally Firth's. It was first coined by Palmer, who, in his *Second Interim Report on English Collocations* (1933), compiled for the Japanese Department of Education, and in his book *Grammar of Spoken English* (1939), used it to refer to compounds. Palmer's interest in the classification of idioms and collocations was reflected in his close association with Hornby, who authored *The Advanced Learner's Dictionary* (1952), the original title being *The Idiomatic and Syntactic English Dictionary* (1942). Hornby's work is a prototype of his *Oxford Advanced Learner's Dictionary of Current English* (1974) which is basically a dictionary of collocations. However, the earliest dictionary of collocations entitled *Dictionary of English Style* (1920) was written by Reum (cited by Newmark, 1988: 175).

1.3 Definitions of collocation

Over the past five decades, linguists, lexicographers, teachers and researchers have elaborated on the phenomenon of 'collocation'. Bahns (1993) writes, '*collocation* is a term which is used and understood in many different ways'. Let's consider a few of the following definitions:

1.3.1 Co-occurrence of words

Some linguists and lexicographers define *collocation* as a co-occurrence of words:

> ... words combining or coming together in a way characteristic of language; eg. *strong tea, heavy drinker, by accident, so as to.* (*Oxford Advanced Learner's Dictionary of Current English,* 1974).
>
> ... the co-occurrence of two or more lexical items. The collocating items may be juxtaposed (*qualifying test*) or separated by one or more other elements, grammatical or lexical (*argue rather less vehemently*), from which can be abstracted the verb+adverb collocation *argue vehemently.* (Cowie, 1978).
>
> ... consisting basically of two or three lexical (sometimes called full, descriptive or substantial) words, usually linked by grammatical (empty, functional, relational) words; eg. *a mental illness.* (Newmark, 1981).
>
> ... two or more words that go 'happily' or naturally with each other. (Newmark, 1988).
>
> ... any small group of consecutive words from an utterance or text; eg. *yellow dreams* is an unusual collocation. (*The Macquarie Dictionary,* 1991).

From the above quoted definitions, 'collocation' is construed as a language-specific phenomenon in which words, both grammatical and lexical, co-occur adjacently or separately in a harmonious manner, except for special cases.

1.3.2 Habitual co-occurrence of words

Others view 'collocation' as a habitual co-occurrence of words:

> ... a group of words that occurs repeatedly in a language (Benson, 1985; Carter, 1987).
>
> ... the way that some words occur regularly whenever another word is used (*Collins Cobuild English Language Dictionary,* 1987).
>
> ... the habitual co-occurrence of individual lexical items (Crystal, 1986).
>
> ... a habitual arrangement or conjoining of particular words; eg. *green as grass, pass the buck* (*The Macquarie Dictionary,* 1991).

The above definitions lay emphasis on the frequency of word co-occurrences, while the illustrative examples give one an impression that fixed, idiomatic phrases are collocations; ie. *green as grass, pass the buck.*

1.3.3 Fixed, non-idiomatic and recurrent combinations

Benson, Benson and Ilson (1988) consider fixed, non-idiomatic and recurrent combinations to be collocations:

> ... In English, as in other languages, there are many fixed, identifiable, non-idiomatic phrases and constructions. Such groups of words are called *recurrent combinations, fixed combinations* or *collocations* (*BBI*, 1986:xv).

These authors even go further as to distinguish between two major types of collocations:

> ... Collocations fall into two major groups: *grammatical collocations* and *lexical collocations* (*BBI*, 1986:xv).

Examples of grammatical type are given as *advantage over, adjacent to, adhere to, by accident, to be afraid that...* and examples of lexical type as *inflict a wound, weak tea, bees buzz, a pride of lions, keenly aware, anchor firmly.*

1.3.4 Relatively fixed combinations

Benson, Benson and Ilson (1986a:252-53) also provide us with a better understanding of 'collocations' by comparing them with 'free combinations', and 'idioms'. They use combinations with the noun *murder* to illustrate the distinctive features of the three categories. The loosest type of word combinations are the so-called 'free combinations'. The noun *murder* can be used with many verbs (ie. *condemn, abhor, boast of, discuss,* (etc.) *a murder*), and these verbs, likewise, combine freely with other nouns. 'Idioms', on the other hand, are the tightest type of word combinations whose meanings, unlike 'collocations', do not reflect the meanings of their constituent parts. An example containing the noun *murder* would be *scream blue murder* ('to complain very loudly'). Between 'idioms' and 'free combinations' are the loosely tight or relatively fixed combinations (or

collocations) of the type *commit murder*. This notion of a cline can be diagrammed as follows:

Free		**Relatively fixed**		**Fixed**
Free combinations [*condemn murder*]	◄——►	Collocations [*commit murder*]	◄——►	Idioms [*scream blue murder*]

There is, however, an overlap between 'free combinations' and 'collocations', as well as a grey area between 'collocations' and 'idioms'.

1.3.5 Collocation overlapping with idiom

Sinclair (1991) shares the same view with BBI when he says idioms overlap with collocations and the line between them is not clear:

> ... We call co-occurrences idioms if we interpret the co-occurrence as giving a single unit of meaning. If we interpret the co-occurrence as the selection of two related words, each of which keeps some meaning of its own, we call it a collocation. Hence, *hold talks, hold a meeting, hold an enquiry* are collocations; whereas *hold sway, hold the whip hand* are idioms. (Sinclair, 1991: 172).

1.3.6 A dynamic rather than a static phenomenon

Abu-Ssaydeh (1991) also views 'collocation' as a scale on which fixed collocations, namely *idioms*, can be listed at one end and *free collocations* can be placed at the other, with the rest of the lexis spanning between the two extremes. And as collocation is open-ended, it would be more practical to view it as a dynamic rather than a static phenomenon. He then gives a comprehensive definition of the term 'collocation' thus:

> ... a language-specific lexical phenomenon which denotes the potential a certain lexical item may demonstrate in occurring with another item. As such, it subsumes other designations like composite elements (Cowie, 1981), multi-word units, idioms, collocations and longer than word combinations (Bolinger, 1976). (Abu-Ssaydeh, 1991).

For the scope of the present study which focuses on the interrelationship between collocation and translation, Abu-Ssaydeh's definition of collocation has been chosen.

1.4 Approaches to structure

For lexicographical as well as pedagogical purposes, some lexicographers and teachers have categorized collocations according to their different grammatical patterns.

1.4.1 Cowie's coding

Cowie (1978) thus considers:

> ... the co-occurrence of two or more lexical items as realizations of structural elements within a given syntactic pattern; eg. *check a bill* (verb+object noun), *marriage service* (modifying noun+head noun), *argue vehemently* (verb+adverb). (Cowie 1978).

1.4.2 Newmark's grouping

Newmark (1981) defines a collocation as:

> ... the element of system in the lexis of a language. It may be syntagmatic or horizontal, therefore consisting of a common structure; or paradigmatic or vertical, consisting of words belonging to the same semantic field which may substitute for each other or be semantic opposites. These become collocations only when they are arranged syntagmatically. (Newmark, 1981: 114).

He thus divides syntagmatic collocations into seven main groups:

a) Verb+verbal noun (*pay attention, run a meeting*).
b) Determiner+adjective+noun (*a pretty girl*).
c) Adverb+adjective (*immensely important*).
d) Verb+adverb or adjective (*shine brightly, work hard*).
e) Subject+verb (*the dog barks, the cat purrs, the door creaks*).
f) Count noun+*of*+mass noun (*a loaf of bread, a cake of soap*).
g) Collective noun+*of*+count noun (*a pack of cards, a bunch of keys*).

It is noted that Newmark is inconsistent in his use of word classes. In (e) above, subject+verb is used instead of noun+verb. He distinguishes two subgroups depending on a mutual attraction between the noun and the verb (*the bell rings, teeth chatter*) or a fairly high expectation that a particular verb will follow the subject (*the door creaks*) (Newmark, 1981:115). With regard to paradigmatic collocations, he makes the statement that they may consist of the various synonyms and antonyms that permeate all languages.

Newmark (1988) edits his syntagmatic collocations from seven main groups into three main groups, centering all three in the noun, the second component (collocate) of the collocation. According to him, for the translator, collocation consists of lexical items that enter mainly into high-frequency grammatical structures such as:

a) Adjective+noun (*heavy labour*)
b) Noun+noun *(government securities)*
c) Verb+object (*pay a visit*)

It is noted that in c) above Newmark, for some unknown reason, has used verb+object instead of verb+noun. However, he writes that, normally the noun + object denotes an action.

1.4.3 BBI's patterning

The BBI Dictionary (1986) divides collocations into two groups: grammatical collocations and lexical collocations. Grammatical collocations are listed under the dominant word which is the noun, the adjective or the verb, and are described as being of eight major types (G1 to G8):

G1. Noun+preposition *(hostility between)*
G2. Noun+ *to*+infinitive *(pleasure to do it)*
G3. Noun+*that* +clause *(an oath that he would do his duty)*

G4. Preposition+noun combination *(at anchor)*
G5. Adjective+preposition combination that occurs in the predicate *(angry at everyone)*
G6. Predicate adjectives+*to*+infinitive *(it was necessary for him to work)*
G7. Adjective+*that*+clause *(it was imperative that I be there)*
G8. Nineteen English verb patterns, designated by the capital letters A to S, with a description of each verb pattern in full.

It is also noted that collocational types G2 and G3 and G6 and G7 are closely related grammatically to some of these verb patterns. Details of these grammatical verb patterns are not considered to be within the scope of this study.

BBI describes seven major types (L1 to L7) of lexical collocations:

L1. Verb+noun/pronoun or prepositional phrase *(set a record, come to an agreement)*
L2. Verb+noun *(squander a fortune)*
L3. Adjective+noun *(pitched battle)*
L4. Noun+verb (of action) *(blizzards rage)*
L5. Noun_1+*of*+noun_2 *(a bouquet of flowers, an article of clothing)*
L6. Adverb+adjective *(strictly accurate)*
L7. Verb+adverb (*apologize humbly*)

It is noted that the verb in L1 denotes creation and/or activation (CA); eg. *reach a verdict; fly a kite,* while the verb in L2 means essentially eradication and/or nullification (EA); eg. *lift an embargo; dispel fear.*

1.4.4 Nguyen's Categorization

In reference to Vietnamese syntax, Dinh-Hoa Nguyen makes a distinction between the Noun Phrase and the Verb Phrase (Nguyen, D.H. 1988: 8-10; 1997:171-201). With the Noun Phrase he mentions seven structural types; namely, (1) Noun-noun, (2) Noun-preposition-noun, (3) Noun-place-noun, (4), Noun-numeral, (5) Noun-verb/adjective, (6) Noun-demontrative, (7) Noun-relative clause. With reference to the fifth category; ie. Noun-verb/adjective, Nguyen feels there is little reason for setting up distinct classes of 'verb' and

'adjective', so he collapses 'verb' and 'adjective' into one.

Under the heading Verb Phrase, Nguyen mentions 10 structural types; namely, (1) Verb-noun, (2) Verb-noun-noun, (3) Verb-noun-verb, (4) Verb-place-noun, (5) Verb-numeral, (6) Verb-verb (-verb), (7) Verb-adjective, (8) Adjective-noun, (9) Adjective-verb, (10) Adjective-adjective. Unlike in the Noun Phrase, Nguyen does distinguish classes between 'verb' and 'adjective' in this heading Verb Phrase, the reason being that when the head is the 'verb' proper, it is 'an action verb', but when the head is 'adjective' or 'adjectival', it is 'a stative verb' or 'a verb of quality'. In this instance, several different configurations are possible.

For the purpose of this study, eight grammatical patterns are chosen:

(a) Noun+noun: no function word occurs between the head noun and the second noun (*bát cơm* 'bowl of rice', bao thuốc lá 'pack of cigarettes', *nải chuối* 'hand of bananas', *ngón tay búp măng* 'tapered fingers' [lit. bamboo, shoot, fingers], *gà mẹ* 'mother hen', *sông Hương* 'the Perfume River')

(b) Noun+verb/adjective: (*thịt kho* 'meat stewed in fish sauce', *đường về* 'the way back', *con người khổ sở* 'miserable person')

(c) Verb+noun (direct object): (*ăn đũa* 'eat with chopsticks', *cúi đầu* 'bow one's head', *nghỉ hè* 'take a summer vacation' [lit. rest, summer])

(d) Verb+verb(+verb): (*lo thi* 'worry about examinations' [lit. worry, take, examinations], *liều chết* 'risk death' [lit. risk, die], *đi học về* 'come back from school' [lit. go. study, return])

(e) Verb+adjective: (there is no separate class of adverbs of manner) (*ăn nhanh* 'eat fast', *đối-đãi tử-tế* 'treat nicely')

(f) Adjective+noun: (*mù mắt* 'blind in the eyes', *mỏi tay* 'tired in the arms')

(g) Adjective+verb: (*khó nói* 'difficult to say')

(h) Adjective+adjective: (*mừng thầm* 'inwardly happy')

1.5 Issues related to the study of collocation

1.5.1 Meaning

Firth (1951) talks about 'mutual expectancy' as a source of meaning by

collocation. He assumes meaning springs from the habitual syntagmatic combinations of words. For example, the word 'dry ' has its own meaning but when it combines with 'wine', 'toast', 'cow', it will yield three different meanings: 'not sweet', 'without butter or the like', 'not yielding milk' respectively. By the same token, the word 'fresh' in collocation with 'water', 'supplies', 'footprints' will give three different meanings: 'not salt', 'additional or further', 'newly made or obtained' respectively.

Martin Joos (1958) takes a slightly different perspective and claims that co-occurrences merely help to eliminate meanings or to 'throw light on the meaning of the words involved'. He gives the example of the word *code* and shows that it brings all of its numerous meanings into collocations, where it sheds to focus on one surviving meaning in each collocation: *safety code, rigid code, moral code, code of ethics, code of good manners,* etc.

Newmark (1988) shares the same view with Joos when he writes:

> ... The collocates within a collocation define and delimit each other by eliminating at least some of their possible meanings, the defining may be mutual and equally balanced, but more often it is closer for one collocate than for the other.

He illustrates his point by using the example *to pay attention,* which he calls a collocation. The number of senses of *pay* is reduced to one. The meaning of *attention* is not so drastically affected, but it excludes *attention* in the sense of 'care, solitude'.

Sinclair (1991) is interested in corpus linguistics as a means of exploring the way meaning arises from language text. Sinclair refrains from defining the word 'collocation', however, he posits two different principles or Models of

Interpretation a) The Open Choice Principle and b) The Idiom Principle. His Open Choice Principle is a purely grammatical choice, while his Idiom Principle is one of lexical choice, which is a much more difficult choice because of the many different ways in which words occur together. Often, one cannot explain why certain word combinations are acceptable and others are not, and one cannot say that there is an impossible collocation, because future acceptability may change meaning. Sinclair states that his Principle of Idiom is a large number of semi-preconstructed phrases that constitute single choices, and that idioms, proverbs, clichés, technical terms, jargon expressions, phrasal verbs and the like can all be covered by a simple statement.

In compiling evidence of his Idiom Principle he believes that his principle, rather than being considered a minor feature, compared with grammar, should be considered at least as important as grammar in the explanation of how meaning arises in texts. To support this, he has undertaken research into long texts, and in his research he has brought forth a number of problems.

a) The meanings of very frequent, so-called grammatical words are typical of the difficulties being encountered.

b) Some 'meanings' of frequent words seem to have very little meaning at all; eg. *take*, in *take a look*.

c) The commonest meanings of the commonest words are not the meanings supplied by introspection; eg, the meaning of 'back' as 'the posterior part of the human body, extending from the neck to the pelvis' (*Collins English Dictionary* (CED) 2nd edition 1986 sense 1) is not as common as its adverbial sense (listed as sense 47) 'in, to or toward the original starting point, place or condition', which is closer to the commonest usage.

d) The commonest meanings of many less common words are not those supplied by introspection; eg, sense 1 in the *CED* for *pursue* 'to follow (a fugitive etc.) in order to capture or overtake', is far less common than its commonest meaning in sense 5, 'to apply oneself to (one's studies, hobbies, interests etc.)'.

1.5.2 Habituality

The issue of habituality is mentioned by Firth (1951), Crystal (1987), *The Macquarie Dictionary* (1987) while words such as 'recurrent'(*BBI*), 'repeatedly' (Benson, Carter), and 'regularly' (*Cobuild,* Baker) are used as substitutes for the word 'habitual'. Firth's concept of collocation was improved by Halliday, Sinclair, Greenbaum and other British linguists to make it a modern collocational theory. Firthian collocation theory describes collocations according to their statistical probability without considering syntactic conditions. In collocational analysis, Roos (1976) distinguishes two types of collocations: one occurs only 'occasionally' such as *hate* and *pictures* in (*The girls hate pictures*), the other like *take* and *pictures* in (*The girls take pictures*) seems to collocate 'habitually'. While the first type, also called a 'free collocation' (*BBI,* 1986) or 'loose association' (Chomsky, 1964), has no relevance for second language learning and very little relevance for dictionary compilation, the second type definitely has. Firth labelled the latter type 'habitual' collocation, Sinclair called it 'significant' and Greenbaum 'principal' collocations.

1.5.3 Naturalness

In the 1988 definition by Newmark the words 'happily' or 'naturally' are used in a very emotive and subjective way. In *The Macquarie Dictionary* (1991) definition, an example *yellow dreams* was given as an unusual collocation. One wonders if this is an instance of collocation in the sense given by Newmark as the words *yellow* and *dreams* could not be considered as going 'happily' and 'naturally' with each other. Unlike grammatical statements where words are considered to be either admissible or inadmissible, statements about collocation are made in

terms of whether the combinations are typical or untypical. In other words, there is no such thing as an impossible collocation. New and unusual combinations of words, or marked collocations, are often used in fiction, poetry, humour, and advertisements to create unusual images, produce laughter and catch the reader's attention. (Baker, 1992: 51). However, corrections will be made to learners or translators of English if they produce such combinations as **dense tea, *strong car,* or **carry out a visit* under normal circumstances.

1.5.4 Distance

Cowie's definition presupposes that collocating items may be either juxtaposed or separated by one or more other elements, but in *The Macquarie Dictionary* (1991) definition, the word 'consecutive' appears to be contradictory. Sometimes, words are not necessarily adjacent to be considered as collocations. Apart from Cowie's example given in his definition *argue rather less vehemently,* let us consider the following examples:

1) It was an *auspicious occasion.*
2) The *occasion* on which it was done was not an *auspicious* one (Sinclair, 1966: 413).

The collocation of *auspicious* and *occasion* is similar in each sentence. However, while the two words *auspicious* and *occasion* are lexically contiguous in the first sentence, not only are they separated by eight other words, but also they are arranged in reverse word order in the second sentence. In deciding the maximum distance between items that can be said to be collocating, Sinclair adopted a relatively arbitrary and *ad hoc* solution of restricting the collocating items to a *span* of a fixed number of words on either side of the specified key word or *node* whose collocations are being investigated. Items in the environment set by the

span were called *collocates*. This can be represented diagrammatically as follows:

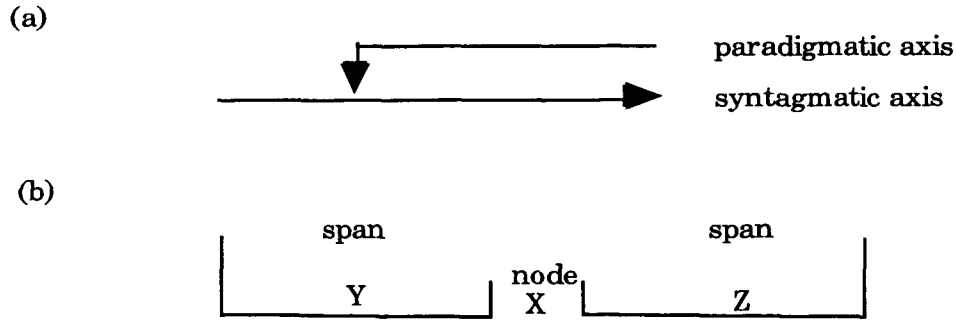

[Nattinger, DeCarrico, p. 21]

Sinclair's aim was to study large quantities of text in order to focus in a statistically significant way on the company kept by particular words, and for the 'strength' and 'weakness' of partnerships to be expressed in terms of percentile frequencies of co-occurrence (Sinclair, 1966: 415). If the 'node' occurs with a 'span' of particular words at a frequency greater than chance would predict, then the result is a collocation. The more certain the words in the 'span' are to co-occur with the 'node', the more fixed and idiomatic the collocation.

1.5.5 Idiomaticity

The *BBI* definition states that 'non-idiomatic phrases and constructions' are to be considered as collocations. However, if we look at *The Macquarie Dictionary* (1991) definition, the examples given of collocation are really idioms; ie. *green as grass* and *pass the buck*. This, to a lay person, shows up the conflicting nature of the definitions. According to Palmer (1981: 79), 'Idioms are sequences of words whose meanings cannot be predicted from the meanings of the words themselves, eg. *kick the bucket* ('die'), *fly off the handle* ('lose one's temper') as contrasted with *kick the table, fly off the roof*. Idiom involves collocation of a special kind, and in the example *kick the bucket*, the meaning of the resultant combination is opaque;

however, sometimes meaning can be predicted and is more transparent; eg. *as sober as a judge, it's raining cats and dogs.* Carter has tentatively defined idioms as '(1) non-substitutable or fixed collocations, (2) usually more than single word units, (3) semantically opaque.' (Carter, 1987: 58).

1.5.6 Fixity

The *BBI* definition mentions 'fixed phrases'. This term is misleading as one could miscontrue these 'phrases' as having the same fixity as idioms and, fixed expressions. Idioms such as *spick and span* ('neat, clean, and tidy'), *the long and the short of it* ('the basic facts of the situation') allow no variation in form, and the fixed expressions *Merry Christmas, Ladies and Gentlemen* behave very much like idioms, in that we cannot change or insert words, and the expression has to be taken as one unit to establish meaning (Baker, 1992: 63).

Collocations, however, may allow for variations in form, under normal circumstances, as they are flexible patterns of language. In the case of literary or poetic works, this norm is sometimes changed for effect. If we look at the examples below, we will see how collocations are not subject to fixed structural patterning; eg. *She broke my heart, My heart was broken, heart-breaking, heart-broken.*

Authors such as Carter, Cowie and Mackin have different points of view in their classification of idioms and fixed expressions. In many of their works it was noted that some fixed expressions and idioms were included as collocations. [Cowie and Mackin (1983), Alexander (1984), Carter (1986)]. Mackin included such things as 'proverbs, sayings, similes, catchphrases, linked words, foreign expressions, Cockney rhyming slang, quotations and metaphors' in his 'so-called'

fixed phrases. Sinclair (1991) in discussing his idiom principle mentioned the term 'semi-preconstructed phrases' to refer to collocation, which includes idioms, proverbs, cliches, technical terms, jargon expressions and phrasal verbs. Collocation, according to him, illustrates the principle of idiom which constitutes single choices.

BBI uses the term 'fixed phrases'; however, they do not include the same types of 'fixed phrases' as those of other authors; eg. Mackin (1983), Sinclair (1991), and Baker (1992). *BBI* does not include predictable collocations such as 'builders build, bakers bake' or too many technical terms, no cliches or any other types of fixed expressions such as proverbs and the others, as mentioned by Mackin. In determining how fixed particular lexical patterns are, Carter mentioned three criteria: collocational restriction, syntactic structure, and semantic opacity. The notion of the 'cline' is used to range these units in terms of sets of continua with fixed points but several intermediate categories. (Carter 1987: 62-64).

1.5.7 Ranges

McIntosh (1966) notes the difference between grammatical patterning and lexical patterning and suggests the term 'range' be used to describe the phenomenon of patterns of language which differ from grammatical patterning. 'Range' refers to the set of collocates which are typically combined with the word in question. It is obvious that some words have different ranges from others. The English verb *curry*, for example, is used with *favour* in English in *to curry favour with someone* ('to seek favour with someone by a show of kindness, courtesy and flattery') and is very limited in its range. On the other hand, the verb *wear* has a much wider range of collocates, these being *coat, pants, make-up, perfume, smile, thin,* etc.

Beekman and Callow (1974) mention the two main factors which can influence the collocational range of an item. The first is its level of specificity and the second is the number of senses it has. For example, the verb 'inter' or 'entomb' has a much more restricted range than its superordinate term 'bury', whereas the verb *run*, as a polysemous word, can collocate with a much broader range depending on its different senses. For example, in its sense of 'manage' the verb *run* combines with words like *company, institution, business.* In its sense of 'operate or provide' it collocates with words like *service, course.* (Baker, 1992:50).

1.6 Studies focussing on collocation

The major works undertaken in collocation have been primarily for the purpose of compiling modern dictionaries to help the foreign learner know how to use words in combination with other words, not just for the sake of their grammaticality but also for their idiomacity. In this section emphasis is on the compilation of a few such dictionaries.

1.6.1 Cowie, Mackin and McCaig

In 1978 Cowie brought the learner into focus, in that lexicon was beginning to be seen as a resource for the needs of the learner, and also for strategic use in the gaining of communicative objectives. In the first ODCIE co-written by Cowie and Mackin the basic requirement for entry was that all entries consist of, or include, a verb and a particle or preposition. The second volume published in 1983 was the work of Cowie, Mackin and McCaig, written primarily for the use of advanced foreign learners of English.

The authors placed emphasis on idiomatic English and the range of possible subjects or possible objects in which the idiom is embedded even down to

elaborating upon the internal structure of the idiom; ie. whether the item can be substituted with any other words. For example, in explaining the phrase *the common run*, firstly, an explanation is given of its meaning; ie. the usual, typical kinds (of person or thing) followed by a substitution of the adjective *common* with words such as *general, normal, ordinary* together with the objects which would be associated with that phrase, such as *people, folk, members, soldiers* and *trade unionists*. Quite detailed examples are presented by the authors to give learners an insight into how this phrase and its substitutions can be used (ODCIE: 1983, 113).

Another entry in the dictionary *a big hit* is treated in the following manner. Firstly, the meaning is written; ie. 'a popular success', followed by the subjects; ie. *player, performer, fashion, play, song* and *film*. Included in this entry are the verbs which would most commonly be used, such as *be, make* and *score* and then again, a selection of examples designed to give the language learner the ability to use the idiom correctly (ODCIE: 1983, 64).

With proverbs and sayings (eg. *a stitch in time saves nine)* there is a tendency to indicate the common usage of the idiom by cutting down the length of the explanatory sentences; eg. *He'll wait till the water's coming in on him before he mends that roof. He doesn't believe in <u>the stitch in time</u>, then.* (ODCIE: 1983, 521).

Idioms are presented in their widest sense; ie. at phrase, clause and sentence levels. Phrase level is synonymous with what they call restricted collocations; eg. *a blind alley*, clause level is presented with a verb and the subject, as outlined above, and sentence level involves proverbs, catchphrases and sayings.

In the treatment of collocations, they state that restricted collocations, or semi-idioms, are included in the dictionary because the determination of special meaning by a limited context, such as in *jog one's memory* qualifies them for inclusion. Because of this quality they also hold the view that restricted collocations are idiom-like. What they consider to be 'open collocations' are not included in the dictionary. They argue that the use of the terms 'open', 'free' or 'loose' to refer to such collocations reflects the fact that both elements 'verb and object', or 'adjective and noun' are freely recombinable, as for example in *fill/empty/drain the sink,* and *fill the sink/basin/bucket.*

This opinion of open collocations would not possibly be held by all linguists or lexicographers; however, for the purpose of their dictionary, the authors maintain that not all collocations are of equal interest to the foreign learner, or to the user of this dictionary, and so their exclusion can be justified.

1.6.2 BBI

The notion of collocation for lexicographical purposes has been developed by Morton and Evelyn Benson together with Robert Ilson. In the back notes of their book, *BBI Combinatory Dictionary of English: A Guide to Word Combinations* (1986), they write this dictionary 'tells you which words go together in English and which words do not.' But with hundreds of thousands of word combinations the crucial question which baffled them before the compilation of the dictionary of this type was, 'What must be included and what must be omitted?'. Idioms are not included, as *BBI* does not consider them to be collocations, although such items as similes, which are transitional between idioms and collocations, are included.

The characteristics of the dictionary are that it is mono-lingual with simple definitions and with very little pronunciation guide, as the emphasis is not on meaning but on grammatical and lexical word combinations. Entries are listed in strictly alphabetical order using the headword. There is no such category for noun+noun because in English, according to the authors, nouns are often used as adjectives. As such, they may enter into adjective+noun collocations. In most cases these adjective+noun combinations can be listed with the second noun as the headword, as in *house arrest*, while, in some cases, the collocations can be found more easily when they are listed at the entry for the first noun as the headword, as in *cabinet shuffle.*

BBI have included only common collocations and not those of a technical nature, and to help the user they often provide usage notes within an entry. These usage notes provide additional information about the appropriate use of headwords and their collocates, and whether there is a difference in British English (BE) as compared to American English (AE).

1.6.3 COBUILD

The Cobuild Project, a joint initiative of the University of Birmingham and the Collins Publishing house, was designed initially to lead to the publication of the monolingual foreign learner's dictionary of English, based on naturally occurring data using corpus linguistics. As early as the 1980s, the Project has produced a series of state-of-the-art publications. Among these, mention can be made of the *Collins Cobuild English Language Dictionary* (1987) and the *Collins Cobuild English Grammar* (1990), which were based on the latest optical scanning computer technology, in compiling and examining a corpus of 150,000,000 words

of contemporary English, as well as the *BBC English Dictionary* (1991), which was based on a corpus of 70,000,000 words from BBC World Service programs and 10,000,000 words from American Public Radio Network program. John Sinclair was the driving force behind the original project.

This has now been made possible by using the resources of the corpus known as *The Bank of English.* A *Dictionary of English Collocations* has been produced on CD ROM, making it the most electronically advanced dictionary of collocations up to the present date. However, one of the weaknesses of this dictionary is the fact that it only provides very limited information on collocation and colligation in terms of a small number of concordance lines listed when required.

COBUILD is currently involved in an international project in multilingual lexicography based on its recent research into monolingual sense discrimination for English. "Collocational clues often tell lexicographers what they want to know, and collocational sense, more often than not, shows itself to be of interest to linguists." (Clear, 1996). The setting-up of parallel and comparable corpora for seven languages; namely English, German, Swedish, Italian, Spanish, Hungarian and Croatian, is for the purpose of searching for translation equivalences that exist between two languages. In translation, it is usually possible to find parallels between the textual environment of a word in one language and a word that is used to translate it in another. It also is possible for computers to search for these equivalences, to examine the context of their use and consequently to work out which occurrences of the first-language word can be translated by the same equivalent word in the second language. "Considerable proportions of the central patterning of the language can be prepared for lexicography in this way."

(Sinclair, 1996).

1.7 Summary

The subject of collocation has been broadly discussed, taking into account its historical background which can be traced back to the latter part of the 18th Century. The phenomenon of collocation, as mentioned, was first brought into prominence in linguistics by John R. Firth in 1951 and was widely applicable to the development of idiomatic, syntactic and combinatory English dictionaries during the next five decades.

Different definitions of collocation have been reviewed to highlight the problem and to arrive at a broader definition for this particular study. Different groupings of both English and Vietnamese collocations by the experts in the field have been discussed. Various issues related to the studies of collocation and its application in modern lexicography have been thoroughly treated.

A clear-cut idea of the nature of collocation has proved to be the first step in the right direction for the next chapter, where collocation and its relevance to translation will be discussed.

Chapter Two

Collocation and translation

2.1 The aim of this chapter

Building on the Introduction and Chapter One, this chapter will further explore the relationship between collocation and translation by way of providing an overview of the translation practice and its associated problems in relation to collocation in the Australian context.

2.2 Translation practice

2.2.1 Historical background

Australia has often been described as a 'country of migrants and refugees'. Indeed, apart from about 390 000 Aborigines whose ancestors have been here since time immemorial, the Australian population is largely made up of the white settlers from England, Scotland and Ireland, and their descendants. After the Second World War, however, there was a large influx of refugees and migrants from continental Europe. From the 1970s onwards, political refugees from Asian, Middle Eastern and South American countries sought refuge in Australia, and more recently the Family Reunion Program has accounted for further expansion of the migrant population. Most recently Australia has also helped refugees from the wars in the former Yugoslavian states.

Since the fall of Saigon in 1975 more than 180 000 refugees and migrants from Vietnam have come to live in Australia. Many of these newcomers cannot speak English adequately and because of their lack of English, they cannot socialize or

engage in activities which require an accurate or professional usage of English.

More than any other country with a similar migration program, Australia has recognized the difficulties encountered by new arrivals in the resettlement process. While migrants were once encouraged to assimilate to fit the white English-speaking model, in the last two decades or so, the emphasis has been on integration. At first, new arrivals were encouraged to learn English, but after a while the Government realized that it was not an easy task for the NESB newcomers to overcome the language barrier. The Government therefore recognized the need to provide free or subsidized interpreting and translation services to aid in this resettlement. This undertaking is one of the most tangible facets of multiculturalism in this country.

2.2.2 Multicultural policy

Australia's multicultural policy came into being in the 1970s, but did not have much impact on society until the early 1980s. This policy acknowledges the multilingual and multicultural aspects of the Australian population and encourages the preservation of the migrants' cultural and language traditions. At the same time, it encourages them to consider Australia as their own country and to contribute to building the nation into one of social cohesion and harmony. The Galbally Report (The Review of Post-Arrival Programs and Services) in 1978 recommended that school systems develop various initiatives aimed at improving the understanding of the various cultures, languages and attitudes of the people who made up the Australian society. The Senate Standing Committee established a National Language Policy (1984) with the following goals: competence in English, maintenance and development of languages other than

English, provision of services in languages other than English, opportunity for learning second languages. As a result of this, Vietnamese language and culture classes were established and there was widespread recruitment of Vietnamese teachers into schools, ranging from primary to tertiary level. Vietnamese was first introduced as a Higher School Certificate (HSC) subject in the mid-1980s.

2.2.3 Translation needs

Historically, Vietnamese-English translation began developing in Australia in the mid-1950s when the Australian Government required translated material to keep track of the military and political events in Vietnam. About a decade later, the Australian Broadcasting Commission (ABC) by way of Radio Australia, began short wave broadcasts to Vietnam. As with other overseas Vietnamese-language broadcasts, the majority of items that went to air included material requiring translation from English into Vietnamese, such as news, current affairs and commentaries, and features on the arts, science and technology. Since that time Radio Australia has broadcast in Vietnamese for one to two hours a day every day since 1963, and the quantity of translated material for broadcasting purposes is rather considerable.

After 1975, when a great number of Vietnamese refugees settled in Australia, Vietnamese language newspapers were published and most of their press articles were translations from English sources. The ethnic radio stations, which were first set up in 1978, also required a great many translations from press dispatches which were usually written in English. Since 1992, following the restructure of the Special Broadcasting Service (SBS) Radio, two one-hour transmissions of Vietnamese-language programs have been broadcast each day

on the national network of SBS Radio, requiring a considerable amount of translated material. In 1982, Television channel SBS was established which periodically screens Vietnamese-speaking movies and documentaries with English subtitles. However, the largest source of material which requires translation into Vietnamese for publication is community information which has been disseminated in various forms, ie. leaflets, pamphlets and brochures, on innumerable topics such as law, health, education, housing, motor transport, social welfare. The statistics of the NSW Health Translations Service for the publications during 1984-85 show that Vietnamese translated texts were the most requested texts of the many leaflets, pamphlets and brochures which are produced in seventeen different languages by this Translation Service. Vietnamese texts rank first in order of requested copies, constituting 14.1 per cent of the total 350 393 requests, compared to Arabic, which is the second most popular, being 11.1 percent of the total, followed by Greek at 10.4 per cent.

To help migrants and refugees better understand the Australian lifestyle, the Federal Department of Immigration, Local Government and Ethnic Affairs has distributed a book entitled, Living In Australia. The 342-page Vietnamese version of this revised manual was made available in 1988.

Various government departments have recently begun offering public information in a variety of community languages, in order to make such information more accessible to entire ethnic groups. An example of this is the New South Wales Road and Traffic Authority's translation of the Motor Traffic Handbook into some 10 major languages, including Vietnamese. This translation takes the form of a 100-page booklet which details road rules and regulations for drivers in New

South Wales. The knowledge test, which is the first step towards obtaining a driver's licence in NSW, can be completed in one's mother tongue. Vietnamese migrants and refugees can do this test on computer in their own language. The Residential Tenancies Act of New South Wales is another example of information that is offered in languages other than English. The Vietnamese version of this Act appears in a 25-page booklet published by the NSW Department of Housing.

The majority of texts which need to be translated into English are for the purpose of family sponsorship, job seeking, recognition of qualifications or legal proceedings. Texts include official documents such as birth, death and marriage certificates, divorce papers, academic transcripts, educational qualifications, driver's licences, diplomas and degrees, and written legal or police evidence. Other translation works include the interviews of boat people who arrived on the North and North West Australian shores in the late 1970s and early 1980s, as well as interviews with people recounting their experiences, escape stories, life in refugee camps and early days living in Australia. Some of these stories can be read in Hawthorne's *Refugee: The Vietnamese Experience.* Of late, the translation of Vietnamese literary works of Nguyễn Huy Thiệp, Tam Lang, Vũ Trọng Phụng and Nguyên Hồng has been attempted and published in two separate books entitled, *The General Retires and Other Stories* (1992) and *The Light of the Capital* (1995) by Greg and Monique Lockhardt. The monitoring also of ethnic Vietnamese newspapers by the Ethnic Affairs Commission is an ongoing process, which requires English translation.

2.3 Translator/Interpreter accreditation

Within the framework of a large-scale post-war immigration program and a switch from a policy of assimilation to multiculturalism, there was a rapid growth in the demand for interpreter and translator services in Australia in the 1960s and 1970s. The National Accreditation Authority for Translators and Interpreters (NAATI) was established within the Department of Immigration in 1977 to establish and regulate standards in the delivery of interpreting and translating services. In 1983 NAATI was incorporated into a company registered in ACT, with the Commonwealth, State and Territory Governments as joint shareholders.

2.3.1 NAATI accreditation

Since its inception, NAATI accreditation has emerged as the only accepted qualification for interpreting and translating in Australia. For the past 23 years, hundreds of candidates of both Vietnamese and Australian origin have sat for translating and interpreting examinations which are conducted on a yearly basis by this authority. Today, NAATI is widely accepted and is given support by both Government and private agencies, as well as being used as a benchmark for assessing standards, so much so that, any assignment undertaken in a court of law by a NAATI-accredited Professional Translator or Interpreter would not be challenged as to the integrity and correctness of the work.

2.3.2 NAATI language panels

In order to assess candidates, language panels are set up to cater for approximately 50 languages. These language panels set and mark, as well as review, examination papers. Members are drawn from all major States of

Australia, and dependent on the number of candidates in each particular language, the size of the panel may vary from two to ten members. There is one chairperson on each panel who oversees and coordinates the work assigned to the panel members.

There must be at least one native speaker of the language that is being examined, as well as one native speaker of English on the panel. The majority of panel members examining Vietnamese are native speakers of Vietnamese, however, since its inception, the panel has included four native speakers of English who have expertise in Vietnamese. The panel is comprised of academics who possess qualifications in languages and/or those who have NAATI accreditation and long-time experience as practicing translators or interpreters.

2.3.3 NAATI tests

NAATI tests are conducted once a year with the Translation test held in November-December and Interpreting in May-June. For the Paraprofessional Translator Level (formerly Level 2), the translation tests consist of two compulsory passages of 130 words each, one into and the other from English, for the duration of 90 minutes plus ten minutes reading time. The Vietnamese test was established in the early stages of the program, but was discontinued in the early 1990s. For the Professional Translator Level (formerly Level 3), candidates are allowed to choose two out of three passages of approximately 250 words each to translate either into or from English, depending on which direction they wish to seek accreditation. The time allotted to candidates to do this test is two hours plus 20 minutes reading time. During the translation exams, resources such as dictionaries, glossaries and a thesaurus are allowed.

2.3.4 NAATI sources of texts

Passages chosen for testing are drawn from newspapers, magazines and reading material of a general nature. In particular, at Professional Translator Level this test may include subjects chosen from the fields of law, trade, tourism and commerce, but not from the fields of creative writing or literary criticisms. The passages should be up-to-date, correct, and indicative of texts used in Australia. As well as this, they must be original in the source language and should not be controversial or cause offence. All sources must be correctly documented so that NAATI can check with the original, and all non-English passages must be translated into English.

In the early stages there was difficulty in choosing and selecting Vietnamese texts for examination papers, as most of the texts emanating from Vietnam were merely translations of English texts. They were not authentic Vietnamese texts, as there was no access to reading material from Vietnam, the reason being the volatility of the political situation at the time. This placed examiners under a great disadvantage. However, as reports of a more positive nature came from Vietnam, the media started to feel confident in reporting the news, and examiners were able to use Vietnamese media releases and broadcasts as an examination source.

2.3.5 NAATI levels of difficulty

Candidates for translation tests are allowed to use dictionaries, glossaries and a thesaurus, however, according to the level of accreditation for which the candidate is aiming, there are certain requirements which are considered appropriate to those levels. For instance, a translator must be able to give a written version of a

passage in English, and also be able to give an accurate account of what is written in the given language, and vice versa. Texts chosen for the Professional Translator Test take into account several translation problems such as register, style, tone, idiomatic usage, syntactical complexity and the need for conceptual understanding. Also, the candidates should be able to provide written translations at a speed of approximately 200 to 250 words per hour in a reasonable idiomatic style and free from serious errors.

2.4 Translator training

2.4.1 TAFE

In the early 1980s, training of Vietnamese interpreters and translators started in NSW at Petersham TAFE (Technical and Further Education). At first, the classes were small, and only interpreting at Level 2 was offered; however, as the need developed, translation at Level 2 was also offered. Beginnings were small, but slowly these studies took shape and various States in Australia such as Victoria, South Australia and Western Australia followed suit. In these States the courses were offered through CAEs (Colleges of Advanced Education) or Institutes such as RMIT (Royal Melbourne Institute of Technology).

The gaining of Level 2 Accreditation through these organisations acted as a spring board to further studies at Level 3 and degree courses, which were offered at Universities throughout Australia after the mid-1980s.

2.4.2 Tertiary institutions

At the outset, there were two training institutions, University of Western Sydney, Macarthur (UWSM) in New South Wales and Deakin University (previously Victoria College) in Victoria, which offered tertiary training for translators

leading to the conferring of BA (Interpreting and Translation) degrees in Vietnamese. These courses were approved by NAATI. These were of course not the only institutions offering translator training in Australia, however, for the sake of this thesis, the main emphasis is on those courses which offer Vietnamese as part of the translation course and which have been approved by NAATI.

2.5 Translation quality

An assessment of translation quality in the Australian context was made mainly from a sample of NAATI Level 3 examination papers for translation into English and community information publications for translation into Vietnamese.

2.5.1 Translation into English

As a NAATI examiner since 1985, I had access to NAATI examination papers, and for the particular investigation I had the permission of the NAATI Executive Director to use the papers dating from 1991 to 1993 for research purposes. I also obtained information from a fellow NAATI examiner, who kept records of the Vietnamese successful candidates attempting NAATI tests during that particular period. In this study test examples were selected based on the high number of candidates who failed to produce a correct translation for a particular test item.

For the translator, translating out of one's native-language is always considered more daunting than translating into one's mother tongue. This is true for the majority of NAATI Vietnamese candidates. Of the 90 candidates who attempted the NAATI Level 3 Translation examination papers from Vietnamese into English, during the three-year period between 1991 and 1993, only 4 passed, which accounts for less than 5 per cent, whereas the percentage of successful

candidates translating into Vietnamese at this level during the same period reached 20 to 30 percent. The low success rate of Vietnamese NAATI candidates translating from Vietnamese into English is a good indication of the problems involved in translating out of one's native language.

The reason for failure was mainly due to their excessive errors in 5 out of 10 common areas; namely, 'Too literal a translation in some segments', 'Grammatical errors', 'Syntactic errors', 'Mistranslations' and 'Non-idiomatic usage'. Apart from errors made from excessive misinterpretations, the remainder can be considered as evidence of candidates' poor performance in three general areas; namely 'literalness', 'grammaticalness', and 'idiomaticity', as further discussed in the following examples:

2.5.1.1 Literalness

A literal translation is basically a word-for-word translation in which the source language grammatical constructions are converted to the correct target language equivalents but the lexical words are translated singly, out of context (Newmark, 1988: 46). Evidence of literalness is found in the following examples:

(9) *khối* *vật* *chất*
(9a) mass object substance (word-for-word)
(9b) masses of matter (suggested translation)

Literal translations are evidenced by translations such as 'groups of matter', 'blocks of matter', 'materialistic masses', 'mass of objects', and 'the whole block of substance', with no candidate correctly translating this phrase.

(10) *thuốc* *sốt rét* *giả*
(10a) medicine malaria fake (word-for-word)
(10b) fake anti-malarial drugs (suggested translation)

The translation of this phrase was semantically correct, however, most candidates made too literal a translation because in the Vietnamese text the word *chống* meaning 'anti' is not used. Some of the translations were 'malarian drugs', 'faked quinines', 'anti-malaria', while others neglected to write 'anti' but wrote 'malaria tablets' or 'malaria drugs'.

(11)	*Xe*	*lửa*	*siêu*	*tốc*
(11a)	vehicle	fire	super	speed (word-for-word)
(11b)	The Very Fast Train (VFT) (suggested translation)			

This text was most likely a translation which was an adapted version from an English newspaper, and the candidates were attempting a back-translation. It was obvious they did not know about the VFT project in Australia, and therefore, translated too literally from Vietnamese into English. Translations of VFT included 'Super Fast Train', 'Super Fast Train System', 'Ultra High Speed Trains', 'Express Trains', and 'Supertrains'. This back translation should have been rendered as 'The Very Fast Train (VFT)'

2.5.1.2 Grammaticalness

Grammatical errors were found to be prominent in the use of English prepositions and tenses. Let's consider the following examples:

(12)	*Mấy*	*năm*	*trở*	*lại*	*đây*
(12a)	a few	year	come	back	here (word-for-word)
(12b)	For the past few years (suggested translation)				

The candidates' translations of this apparently simple English phrase were 'In a few years recently', 'In the past years till now', 'In the last recent years', 'In a few recent years', and 'In the last couple of years'.

(13)	*chúng ta*	*thường*	*liên*	*tưởng*	*đến*
(13a)	we	often	link	think	to (word-for-word)
(13b)	we often think of (suggested translation)				

The translation into English of the words *liên tưởng* was very much influenced by the Vietnamese literally meaning 'link think' or 'inter think'. As a result, the text was glossed as 'We usually envisage', 'We always associate to', 'We used to recall of', and 'We often thought of'. The verbs 'envisage', 'recall', and 'associate' would be considered equivalents of the Vietnamese expression *liên tưởng*; however, the use of the preposition, or even the lack of it, caused these translations to be incorrect. The omission of a preposition after 'recall' would render a correct translation and the use of the preposition 'with' in place of 'to' after 'associate' would also render an acceptable translation.

(14)	*Gần đây*	*thế giới*	*đứng*	*trước*	*một*	*thực tế*	*đáng lo ngại*
(14a)	near here	world	stand	before	one	reality	worth concern
(14b)	Recently the world faced a worrying reality (suggested translation)						

The wrong use of tenses was found in 'Recently the world *is facing* a worrying reality', 'Recently the world *has been facing* a worrying reality'. If something happened recently, it happened only a short time ago. In this particular case, the correct tense of the verb 'face' used with 'recently' is the Simple Past, *faced* , or the Present Perfect, *has faced.*

2.5.1.3 Idiomaticity

The term idiomaticity here refers to words being used in a way that sounds natural to native speakers of the language (*BBC English Dictionary,* 1992). Most candidates failed to show an acceptable degree of idiomatic English usage in their performance.

(15) *Thuốc men giả*
(15a) medicine fake
(15b) Fake pharmaceuticals (suggested translation)

Synonyms for *fake* were used, however, the words *fake pharmaceuticals* produced such translations as 'counterfeit drugs', 'faked medicines', 'imitated drugs', 'false medicines', 'falsifying drugs', 'faking medicines' and 'forged medicines'. The Vietnamese *giả* is used to mean all the different ways that the word *fake* can be rendered, however, this is not the case in English.

(16) *người thuận thảo*
(16a) person harmonious devoted
(16b) an amicable person (suggested translation)

In Vietnamese the word *người thuận thảo,* word-for-word meaning 'person harmonious devoted', is uncommonly used. Most candidates were unsuccessful in rendering this phrase into English. Translations included 'a man of credits', 'a pious person', 'a filial person', 'a common sense person'. Other renderings such as 'a concord man', and 'a concorded person' are considered unidiomatic. In English we say 'a person who lives in harmony with others' and the word 'pious' infers that 'a person is devout and religious'. The word could be construed as being appropriate but is usually not used in this context. Also *harmonious* is used for describing inanimate objects rather than people; eg. *a harmonious marriage.*

(17) *những xứ sở mùa đông tuyết phủ*
(17a) PLURAL country season winter snow cover
(17b) the countries covered in winter snow (suggested translation)

Translations included *'snowing winter countries', *'snow-capped countries', 'the countries with snow-covered winter', and 'snowy countries'. Some confusion occurred here because the candidates did not think further and realise that a

'country' or 'winter' cannot be capped with snow. In English, 'snow-capped' combines naturally with 'mountains' or 'peaks of mountains'. 'Winter', as an abstract noun, cannot be 'snow-covered', although the expression mùa đông tuyết phủ ('snow-covered winter') is an acceptable collocational pattern in Vietnamese. There is also some doubt as to whether the combination 'snowy countries' is typical in English.

Apart from the NAATI examination papers, let us now consider translated publications into English, problems of which are minimal, because post-translation editing is part of the process.

From the late 1970s in Australia, translations of Vietnamese into English took the form of the recording of interviews with refugees or translations of refugees' stories. These were translated in the first draft by native speakers, so it was not known if these translations were competently done, or if they were subject to careful editing before final publication.

Community information and official documentation was, and is simply a transference of the information from already translated pro-forma, and once again, the final draft is carefully edited by native speakers.

The monitoring of Vietnamese language newspapers requires translators of ability with the confidence to handle the exacting nature of such work. Often, these translators have contact with expert native speakers of English to whom they can refer.

2.5.2 Translation into Vietnamese

For the purpose of this study, an analysis was made of texts gathered from

personal experience and a number of texts taken from pre-published and published translated materials, during the 1986-1990 period, produced mainly by the NSW Department of Health.

As mentioned above, a personal encounter will demonstrate the difference between an average translator and a skilful translator. In the early 1980s, whilst I first worked as a translator/broadcaster with the BBC in London, President Joseph Tito of Yugoslavia lay very ill. As his death seemed imminent, the BBC had his obituary prepared and taped to be used at any time. We waited for weeks for the Grand Old Man of Yugoslavian politics to die, but Tito went on living, day after day. In a dispatch by a BBC correspondent from Belgrade, the story of the ailing Tito went something like this: '... *Tito was held in such high regard by his people that they almost believed he was immortal. When his illness lasted so long, the Yugoslavian people gradually came to the realization that he was simply mortal'.* An average translator would render the expression 'simply mortal' simply as rồi cũng phải chết ('will die eventually'). However, an experienced colleague of mine rendered the last part of the text as '... *Khi thấy ông bị đau ốm lâu như thế, người dân Nam-tư mới dần dần hiểu ra rằng Tito cũng chỉ là người'.* ('His illness lasted so long that the Yugoslav people then gradually came to the realization that Tito was merely human'). To a Vietnamese listener, the concept of 'mortality' is implied in the phrase 'cũng chỉ là người' ('merely human'), which is considered a better rendering of the phrase than 'simply mortal'.

Another personal experience below may serve as an informal illustration of the problem of quality in translation in Australia. Some ten years ago, on being called to help with a police interview as an interpreter at the high-security

women's prison in NSW, I arrived at the prison gates flanked on one side by a lanky, young constable armed with a portable typewriter and manilla folders, and on the other side by a burly, plainclothed Detective Sergeant holding an armful of dossiers. While the police officers signed in their assorted weaponry at the main desk, I had a chance to look about me. My professional curiosity was drawn to a poster on a nearby wall. It was the type of multilingual poster often seen displayed at railway stations and other such places. The poster, which was rendered into 11 different community languages, reads as follows:

'CHILD SEXUAL ASSAULT'
'It's often closer to home than you think'

My eyes scanned down the lines of multilingual translated texts for the Vietnamese translation which came eighth in order of languages. As I considered the Vietnamese rendering of the title 'child sexual assault', it somehow didn't ring true to me: *"xâm-phạm tiết-hạnh trẻ thơ"* (literally 'Violating Innocent Children's Chastity'). In Vietnamese, the word *tiết-hạnh* means 'virginity and good conduct'. Of course, it denotes virginity in young girls and good conduct in widows who remain chaste after the death of their husbands. It therefore immediately rules out boys... The text's message was immediately cut by half through an incorrect translation.

Being intrigued by the translation, I took out my notebook and copied down the translated notice. My friendly neighbourhood policemen immediately joked that I was 'casing the joint' and drawing a plan of the prison for someone to make a quick getaway. What amused me even more, however, was the remainder of the translated text which read: *"Sự xâm-phạm này có thể xảy ra ở gần nhà hơn là bạn*

nghĩ" (literally 'This violation may occur nearer your house than you think'). The expression 'nearer your house' has, of course, a more physical meaning than 'closer to home', which carries a more abstract connotation. As a consequence, Vietnamese parents who have read the slogan, might be forgiven for thinking that 'young girls, and not boys, will be safe from being sexually assaulted if they are kept inside the house'.

The original text's message had been totally misinterpreted because of the translator's lack of knowledge of the full background of the campaign to protect children within the community. Under the Child Protection Act the slogan 'Stranger Danger' was first used, indicating to parents and children that they must not talk to or go with strangers, for fear of being harmed by them. The next phase of the campaign was then to focus on the fact that it was not only strangers who could harm children, but that danger could also exist within the homes in which children lived. It was understandable then, that on reading the translation, Vietnamese parents would not understand the meaning of the text, and so unwittingly, by their actions of sticking to what the poster recommended they do, they may have put their girl or boy in physical or sexual danger at the hands of a family member or friend.

A suggested and effective translation for the slogan would be *Coi chừng hành-động tồi bại đối với trẻ em. Can phạm có thể là bạn bè hoặc người nhà, chứ chẳng phải chỉ là người xa lạ* ('Beware indecent acts upon children. Offenders can be family or friends, not just strangers').

Suffice it to say that against expectations, most Vietnamese published translated materials showed at best they are awkward or unnatural as well as

nonsensical or incomprehensible. Common errors are indicative of the translators' poor performance in the same three general areas as discussed in 2.5.1; namely 'literalness', 'grammaticalness', and 'idiomaticity'.

2.5.2.1 Literalness:

Literal errors were found in the description of body positions and the forms of address.

2.5.2.1.1 Body positions

A clear example of literalness was detected in a translated text in which a young mother with a baby is directed in a pamphlet to put the baby on its stomach. In Vietnamese this would be translated as *nằm sấp* 'prone'(literally 'lie, (face) down'). It is not necessary for this to be translated as **nằm sấp trên bụng* (literally 'lie, down, on, stomach') because this translation has been influenced by the source text, in this case, English, and the Vietnamese translation sounds superfluous, naive and awkward. By the same token, if someone is asked to 'lie on their back' the translation would be be *nằm ngửa* 'supine' (literally 'lie, (face) up') in place of **nằm ngửa trên lưng của họ* as it is literally translated from the English text.

2.5.2.1.2 Forms of address

The personal pronoun 'you' has a high frequency of occurrence in English. In Vietnamese there is no universal 'you' as in English. The translator needs to consider each instance 'you' is used in order to choose the closest equivalent, which, in Vietnamese must be based on age, sex, marital status, social status. When 'you' is translated as *bạn* (literally 'friend') as is often the case found in translated publications, it would sound at best, unnatural, at worst,

condescending and would keep the reader at a distance. Therefore, *bạn* in place of 'you' should only be used as a last resort.

Let us consider an example of inappropriate rendition of the pronoun 'you'. A translated post-natal pamphlet in public hospitals addresses mothers who have had premature babies as *quí bà* ('distinguished ladies'), the term of address used for older women from a high-class background, and who would possibly be receiving medical help only in a private French hospital in the former South Vietnam. The appropriate form would have been to use the word *chị* or *các chị* ('you') to address a woman or women of child-bearing age from a lower socio-economic background.

The automatic rendition of the English pronoun 'I' into Vietnamese in community information translated texts is considered unnatural. In English, people ask questions using the first person pronoun 'I'. For example, 'How do I find out how our baby is doing?' or 'How will I manage when the baby comes home?'. Vietnamese people do not ask themselves questions as such, particularly in a written form as titles. If they do, they say something like 'How does one find out about...?' or 'How will one manage...?'. The personal pronoun *tôi* ('I') should be replaced with *ta, mình* ('one, I, we') or with nothing at all.

2.5.2.2 Grammaticalness

Grammatical errors were found in the use of Vietnamese numerals, plural markers, classifiers, time adverbials, passive construction, and law of continuity.

2.5.2.2.1 Numerals

Articles in English are not synonymous with Vietnamese numerals or classifiers.

(Bửu 1989: 29, Thompson, 1965: 180, Lê, 1948: 190, Nguyễn, 1957a: 124). In an unpublished text the English indefinite article a(n) seemed to be consistently rendered into Vietnamese, as một ('one') as in the following example:

(1) When *a* man and *a* woman decide to have *a* baby
(1a) *Khi một người đàn ông và một người đàn bà quyết định có một đứa con*
('When one man and one woman decide to have one baby')

In (1a) the translated text does not sound right to a Vietnamese ear. And '*a baby*' here does not mean 'one baby'. Một is not the indefinite article a; it is a numeral. It means 'one' rather than a or an. And in most cases it can be dispensed with. Therefore, 'decide to have a baby' can be perfectly rendered as *quyết định có con*, or even more naturally *muốn có con* ('wish to have a baby'). The translated text can be improved as:

(1b) *Khi hai người khác phái quyết định có con với nhau*
('When two people of the opposite sex decide to have a baby with each other')

2.5.2.2.2 Pluralization

In principle, Vietnamese words các, những are used as plural noun markers to convey the notion of plurality (Thompson 1965: 180). However, the automatic use of các, or những in rendering plural nouns in English is considered ungrammatical. Examples are found in the rendition of the titles or subheadings 'Premature babies', 'Breathing problems', 'Doctors and nurses'. Preferred translations would be *Trẻ sinh non* without những , *Chứng khó thở* without các, and *Bác-sĩ và y tá* without các.

2.5.2.2.3 Nominalization

The term nominalization is used here to refer to the process whereby Vietnamese translators automatically render English nouns into Vietnamese nouns by using

noun markers such as sự and việc. In doing so, the risk is run of sounding ineffective or nonsensical. There are instances, whereby translation shifts will help make the use of Vietnamese noun markers redundant and make the message clearer. For example, the sub-heading 'Warmth' in the context of premature babies can be rendered as *Giữ trẻ cho ấm* ('Keeping the baby warm') in place of *Sự ấm áp* ('Warmth') which sounds obscure and absurd in Vietnamese.

2.5.2.2.4 Time adverbials

With regard to sentence structures, translators appeared to be unaware of the differences in word order in relation to adverbs of time between English and Vietnamese. Time expressions in Vietnamese such as *tuần trước* (a week ago), *tháng trước* (last month), *hôm nay* (today), *ngày mốt/ngày kia* (the day after tomorrow), *tháng Năm tới* (next May) come at the beginning of the sentence. The initial position of an expression of time in the sentence will help set the scene and bring into focus the events to be recounted in a certain time-frame, without resorting to the use of tenses, as in English. In Vietnamese parlance, it would be rather unusual to see time expressions at the end of a sentence.

2.5.2.2.5 Passive construction

The use of the passive voice in English particularly in a reporting style is quite common. In the Vietnamese language, the active voice is preferred. As a consequence, words such as bởi, từ ('by, from'), which make the rendered sentence sound foreign to a Vietnamese, can be avoided. For example, the text: 'This survey was conducted by Mr. Warwick Wilson' should be translated as *Cuộc nghiên-cứu này là do Ông Warwick Wilson thực-hiện* ('This survey was by way of Mr. Warwick Wilson to conduct') in place of the un-Vietnamese version *Cuộc*

nghiên-cứu này được thực-hiện bởi *Ông Warwick Wilson.*

2.5.2.2.6 Law of continuity

Vietnamese people observe the law of continuity in syntax (Lê, 1968), which means, what happens first should be described first, whereas in English emphasis is often placed on the importance of the event rather than the chronological order of events. Let's compare the following sentences:

(7) *Dad has just come home from work.*
(7a) *Bố vừa đi làm* về. ('Dad, just, go, work, return'), in place of the less typical:
(7b) *Bố vừa* từ *sở* về. ('Dad, just, from, work, return')

(8) *The Canadian sprinter Ben Johnson has returned to Canada from Seoul.*
(8a) *Lực-sĩ chạy nước rút người Gia-nã-đại Ben Johnson đã* từ *Hán-thành* về *đến Gia-nã-đại.* ('Athlete, run, dash, person, Canada, Ben Johnson, PAST, from, Seoul, return, arrive, Canada'), in place of the less typical:
(8b) *Lực-sĩ chạy nước rút người Gia-nã-đại Ben Johnson đã* về *đến Gia-nã-đại* từ *Hán-thành* ('Athlete, run, dash, person, Canada, Ben Johnson, PAST, return, arrive, Canada, from, Seoul').

2.5.3 Idiomaticity

Errors in non-idiomatic usage of Vietnamese involved translations in the distinction between positiveness and negativeness, between hyponymy and super-ordinateness, as well as in the field of fertility, sex and sexuality.

2.5.3.1 Positiveness vs negativeness

In English there are words which occur comfortably with others to form phrases or sentences, but which carry a positive or negative connotation according to the phrases or sentences with which they co-occur. The translation of these words will sound very un-Vietnamese unless the correct Vietnamese collocation is chosen. For example, the word 'contribute' in English usually co-occurs with words or phrases which can carry either a positive or a negative meaning. Let's

consider the 'goodness' and the 'badness' inherent in the term 'contribute' in the following sentences:

(7) We must all work together to *contribute* to the building of a strong nation. *(positive)*

(8) The Labor Government was blamed by many Australian people for *contributing* to the poor economy. *(negative)*

The Vietnamese equivalent for 'contribute' is *góp phần* or *đóng góp* which can only be used in a positive sense. Thus, the term *góp phần* or *đóng góp* is an appropriate choice for rendering the word 'contribute' in Sentence (7) into Vietnamese, and not Sentence (8), as it would sound less typical Vietnamese if Sentence (8) was translated as:

(8a) *Chính phủ Lao Động đã bị dân chúng đổ lỗi cho là đã *đóng góp vào việc làm tồi tệ nền kinh tế Úc.*

An improved rendition should read:

(8b) *Nhiều người đổ tội cho Chính phủ Lao Động là đã làm cho nền kinh tế Úc trở nên tồi tệ.*

(Many people have blamed the Labor Government for having made the Australian economy worse)

2.5.3.2 Hyponymy vs super-ordinateness

Translators are confronted by problems involving hyponyms and superordinate terms. The commonly used word 'problems' is an example. In Vietnamese, there is no such general term, so in most contexts we have to rely on more specific terms to convey the same idea. The choice of an appropriate word requires a degree of skill and commonsense. Common translations are noted as follows: *các vấn-đề* (issues), *những khó khăn* (difficulties), *những trở-ngại* (obstacles), *các trục-trặc/những sự cố* ([mechanical] troubles). However, depending on contextual meanings of the English superordinate term 'problems', a choice can be made

from among its Vietnamese hyponyms of other terms such as *biến-chứng* (complications), *thắc-mắc* (queries), *lỗi* (fault) [as in *lỗi tại tinh-trùng* (sperm problems); *lỗi ở* ống dẫn trứng' (Fallopian tube problems); *lỗi ở* trứng rụng bất thường (ovulation problems); *lỗi ở* chất nhờn tử cung (mucus problems)] (HTS 511 Vietnamese, 1995), which are different causes for infertility. In such cases, the process of over-translation is recommended (Newmark, 1988: 284).

The term 'rocking', as mentioned in the leaflet 'Premature Babies HTS 1980' is another case in point. The occasion often arises when a translator has to choose a specific meaning for the word 'rocking' in the following text:

(9) Playing with your baby means talking, smiling, putting on some music, putting brightly coloured objects close by (8-12 inches from the head), <u>rocking</u>, hugging.

Because there is no superordinate term for 'rocking' in Vietnamese, the translator must decide whether it is 'rocking in one's arm', or 'rocking the cradle where the baby is lying'. Strangely enough, the end result in the Vietnamese text in question was *ngồi ghế xích-đu* (sitting on the swing) as suggested by the final translation checker.

2.5.3.3 Fertility

In the Vietnamese context, only *người có phúc* ('lucky or blessed people') are endowed with children and that depends on what they have done in previous incarnation periods. To call someone 'infertile', as is the practice in English medical parlance, is tantamount to calling them *vô phúc* ('not blessed') or reminding them how badly they have behaved in past lives. In this case, subtlety in cultural transference is needed, for even though a precise scientific translation should be used to convey the correct message, it may be preferable to render a

slightly inaccurate translation to save shocking the reader and causing uneasiness. For instance, a pamphlet entitled 'Infertility' was originally translated as *Sự Mất Khả-năng Sinh-sản* ('loss of child-producing capacity'). A better translation for 'infertility' would be the expression *hiếm muộn,* which literally means 'rarity and lateness', but conventionally conveys the notion of infertility in both man and woman, and accurately suggests the intention of the text (Trinh, 1998). In fact, the term *hiếm muộn* is commonly used in Vietnamese authentic material written on the same subject (Lương & Nguyễn, 1971: 463).

2.5.3.4 Sex and sexuality

Possibly the most delicate task confronting Vietnamese translators is found in the domain of sex and sexuality. Sex is still something of a taboo subject in a Vietnamese environment, and it too, should be approached in a most subtle manner. The 'sexual act', which was detected in most translations as *hành-động tình-dục,* is in fact a literal translation. In authentic Vietnamese texts, it is rarely referred to as such, but is given such euphemisms as *chuyện mây mưa* ('cloud-and-rain matter'), *chuyện chăn gối* ('blanket-and-pillow matter'), *chuyện trai gái* ('boy-and-girl matter'), *chuyện phòng the* ('bed-chamber matter'), *ăn nằm với nhau* ('eat and sleep together'), *chuyện xác thịt* ('matter of the flesh'), or *giao-hợp, giao-hoan,* or *giao-cấu* ('sexual intercourse'). These words are used to avoid giving the reader an impression of vulgarity or unpleasantness.

The terms 'oral sex', and 'anal sex' are also euphemistically translated by Nguyễn Ngọc Phách as *khẩu dâm* ('mouth, sex'/'sex performed by mouth'), *yêu nhau bằng mồm* ('love each other by mouth'/'speak of your love'); *kê dâm* ('chicken sex'), *tống tình cửa hậu* ('make romantic advances by the back door') to avoid causing

repulsiveness or embarrassment; eg. *bú* ('suck'), *liếm* ('lick'). The term *lít đắp* which is a spoonerism whose form was suggested by Phách to help make its actual meaning *lắp đít* ('mount on to the rear') sound less offensive.

2.6 Summary

The problems of unnatural and unidiomatic target language usage were encountered in Vietnamese public translation exams as well as in Vietnamese community information publications. The reasons for this supposedly collocational incompetence on the part of the translator appear to be in the translator's misconception of their work, lack of cultural sensitivity, influence by language interference, and the lack of proper feedback from readers and/or other translators.

The problems that exist in translation into English are minimal and do not cause great concern, because post-translation editing is part of the process. However, problems do appear to emanate from aspiring translators' lack of proficiency in English, particularly in the domain of idiomatic English. Unidiomatic usage of English in translation subsumes lack of naturalness and grammaticalness in the target language texts, or, in other words, it points to the lack of knowledge of English collocations, whether they be lexical or grammatical. For a better understanding of the issue, English collocational patterns will be surveyed and addressed in the next chapter.

Chapter Three

3.0 English collocational patterning

3.1 The aim of this chapter

Building on discussion in Chapters One and Two, this chapter makes a survey of English lexical collocations based mainly on the data collected. Different aspects of their structures, semantics and themes, as well as the method of data collection are discussed.

3.2 Data collection

In choosing items for collection and storage, a translator-biased approach was adopted. In this approach, the translator is oriented towards selecting data from a variety of corpora, using his own knowledge of both languages under investigation as a benchmark. Most of the combinations chosen were those which possessed particular lexico-semantic features which are alien, unfamiliar, or unpredictable, from the point of view of a Vietnamese translator of English. Consequently, the items collected were characterized by (a) their language-specificity, (b) their culture-specificity, and/or (c) their new concept.

3.2.1 Sources

The source for English data consisted of collocations which were of particular relevance to translators and which were largely derived from the print as well as electronic media. The investigation covered a period of eight years, between the years 1988 to 1996, focussing on Sydney-based newspapers, particularly *The Daily Telegraph* which is a widely read newspaper, also from broadcasts on

nationwide radio programs on Radio ABC (Australian Broadcasting Commission), as well as commercial radio stations, and on national television stations, particularly Channel 9's *Today* morning show.

After 1993, some access to Macquarie University's English Corpus, Ozcorp, was made, allowing me to collect further examples. This corpus covers approximately 20 million words, culled mostly from Australian Nobel-prize winner Patrick White's novels, as well as other Australian fiction and newspapers. At a later date, consultation with *Collins Cobuild Dictionary of English Collocations on CD-Rom* was also made.

Dictionaries were another useful source of data. These included *Oxford Dictionary of Current Idiomatic English* [Vol. 1 (1975, 1979), Vol. 2 (1983)], *BBI Combinatory Dictionary of English* (1986), *Collins Cobuild English Language Dictionary* (1987, 1991), *The Macquarie Dictionary* (1989, 1991), and *BBC English Dictionary* (1992).

Discussion with educated Australian native speakers assisted in the selection and classification of data. Samples of NAATI Level 3 English texts given to Vietnamese candidates between the years 1991 and 1993, together with the investigator's own knowledge of English words and their combinatory possibilities, were another source.

3.2.2 Method

3.2.2.1 Process

The process of data collection included listening, reading and also discussing with native speakers the many collocated items encountered during a period of some

eight years.

Notetaking at first was by hand in a notebook, advancing to an electronic organizer, and then finally on to computer disk thus achieving greater storage and easy retrieval when needed. No effort was made to keep reference material or citations from whence the collocations originated, as I was interested only in the combinations of words, and to keep this material would have been a monumental task.

3.2.2.2 Storage

The application employed to store data and retrieve information is the Database in the Microsoft Works software, version 2.0. This application was produced in 1988 and was a powerful tool to file information.

Some 3 000 English collocations were collected which were subsequently stored on computer disk, using different headings, such as *Code, Head, Modifier, Vietnamese*. Under the *Code* heading, one can find abbreviated forms of the various combinations such as Adj-N (Adjective+noun), N-N (Noun+noun), N-*of*-N (Noun+*of*+noun), N-*and*-N (Noun+*and*+noun) etc. The label *Head* is short for 'headword'. Words entered under this heading can be either a noun, an adjective, or any other word class. The *Modifier* can be one word or a multi-word unit normally used to modify what is considered as the headword. The *Vietnamese* heading is included for the purpose of providing a translation into Vietnamese of the items collected, be they collocational equivalents or otherwise. Examples of how data was electronically stored are listed below:

CODE	MODIFIER	HEAD	VIETNAMESE
N-N	shoestring	BUDGET	ngân-sách eo hẹp
Adj-N	tight	BUDGET	ngân-sách hạn hẹp/eo hẹp
Adj-N	chubby	BUILD	người bụ bẫm
Adj-N	pudgy	BUILD	người mập lùn
Adv-V	solidly	BUILT	người chắc nịch
Adv-V	thinly	BUILT	người mảnh khảnh
Adj-N	stray	BULLETS	đạn lạc
N-of-N	of balloons	BUNCH	chùm bong bóng
N-of-N	of screaming queens	BUNCH	bọn thanh-niên đồng tính luyến ái trai giả gái
V-N	do	BURNOUTS	lái xe hơi thắng gấp bánh xe nghiến mặt đường kêu ken két
N-of-N	of sunshine	BURSTS	trời bừng nắng
N-of-N	of abuse	BURSTS	tuôn bật ra những lời chửi bới
N-N	booze	BUSES	xe thử hơi rượu
N-N	night-owl	BUSES	xe buýt đón thanh-thiếu-niên đi chơi đêm về khuya

3.2.2.3. Retrieval

The retrieval of information from the database can be achieved in various ways. Firstly, a list of collocated items which conform to a particular grammatical pattern can be retrieved using the *Code*, such as Adj-N.

CODE	MODIFIER	HEAD	VIETNAMESE
Adj-N	senseless	DEATH	chết vô nghĩa lý
Adj-N	unnecessary	DEATH	chết lãng nhách
Adj-N	protracted	DEBATE	cuộc tranh-luận dằng dai
Adj-N	robust	DEBATE	cuộc tranh-luận dữ dội
Adj-N	colossal	DEBT	món nợ khổng-lồ
Adj-N	massive	DEBT	món nợ chồng chất
Adj-N	spit-second	DECISION	quyết-định trong tích-tắc
Adj-N	stumping	DECISION	quyết-định gay go
Adj-N	powerful	DRUGS	thuốc loại mạnh
Adj-N	prohibited	DRUGS	ma tuý loại quốc cấm

Following on from this, a particular 'headword' and its range can be obtained by sorting through the *Head* column, as illustrated below:

CODE	MODIFIER	HEAD	VIETNAMESE
Adj-N	abortive	ATTEMPT	toan tính bất thành
N-N	assassination	ATTEMPT	âm-mưu ám-sát
Adj-N	botched	ATTEMPT	toan tính không thành
Adj-N	bungled	ATTEMPT	âm-mưu thất-bại
N-N	coup	ATTEMPT	âm-mưu đảo-chính hụt
N-N	cover-up	ATTEMPT	âm-mưu che dấu bưng bít
Adj-N	deliberate	ATTEMPT	âm-mưu đã cân nhắc kỹ
Adj-N	desperate	ATTEMPT	nỗ-lực tuyệt-vọng
Adj-N	drawn-out	ATTEMPT	cố-gắng kiệt-lực
N-N	extradition	ATTEMPT	nỗ-lực dẫn-độ
Adj-N	fragile	ATTEMPT	cố-gắng mong manh
Adj-N	fresh	ATTEMPT	cố-gắng mới mẻ
Adj-N	last-ditch	ATTEMPT	cố-gắng cuối cùng
Adj-N	misguided	ATTEMPT	mưu-toan sai lầm
N-N	murder	ATTEMPT	âm-mưu sát nhân
N-N	rescue	ATTEMPT	nỗ-lực cứu nguy
N-N	shuttle	ATTEMPT	nỗ-lực con thoi
Adj-N	strenuous	ATTEMPT	cố gắng thật lực

On the other hand, a particular 'modifier' and its range can be accessed by sorting through the *Modifier* column. An example of this is:

CODE	MODIFIER	HEAD	VIETNAMESE
Adj-N	strong	APPEAL	lời kêu gọi mạnh mẽ
Adj-N	strong	AUDIENCES	khán giả gà nhà
Adj-N	strong	BUILD	lực-lưỡng khỏe mạnh
Adj-N	strong	MEASURE	biện-pháp mạnh-mẽ
Adj-N	strong	MEMORIES	kỷ-niệm sâu đậm
Adj-N	strong	PROTEST	phản-kháng mạnh-mẽ
Adj-N	strong	SUPPORTER	người ủng-hộ mạnh-mẽ
Adj-N	strong	WINDS	gió to/lớn/mạnh

Finally, if so wished, a relatively exhaustive list of a particular word and its range can be sorted through both the *Head* and *Modifier* columns.

CODE	MODIFIER	HEAD	VIETNAMESE
V-N	drawing on	EXPERIENCE	lấy kinh nghiệm
Adj-N	appalling	EXPERIENCE	kinh-nghiệm hoảng hồn
Adj-N	bitter	EXPERIENCE	kinh-nghiệm đắng cay
Adj-N	daunting	EXPERIENCE	kinh-nghiệm sợ sệt/lo sợ
Adj-N	earth-shattering	EXPERIENCE	kinh-nghiệm khủng khiếp
Adj-N	fantastic	EXPERIENCE	kinh-nghiệm tuyệt vời
Adj-N	first-hand	EXPERIENCE	kinh-nghiệm đầu tay
Adj-N	frightening	EXPERIENCE	kinh-nghiệm hoảng sợ
Adj-N	hands-on	EXPERIENCE	kinh-nghiệm thực-hành
Adj-N	horrendous	EXPERIENCE	kinh-nghiệm rùng rợn
Adj-N	humiliating	EXPERIENCE	kinh-nghiệm nhục nhã
Adj-N	life-threatening	EXPERIENCE	kinh-nghiệm hú vía
Adj-N	near-death	EXPERIENCE	kinh-nghiệm tưởng chết
Adj-N	out-of-body	EXPERIENCE	kinh-nghiệm hồn lìa khỏi xác
Adj-N	shattering	EXPERIENCE	kinh-nghiệm tả tơi/nát lòng
Adj-N	stunning	EXPERIENCE	kinh-nghiệm tuyệt vời/kỳ thú
Adj-N	terrifying	EXPERIENCE	kinh-nghiệm khủng khiếp
Adj-N	thrilling	EXPERIENCE	kinh-nghiệm thú-vị
Adj-N	traumatic	EXPERIENCE	kinh-nghiệm kinh-hoàng
Adj-N	undesirable	EXPERIENCE	kinh-nghiệm khó chịu
Adj-N	unnerving	EXPERIENCE	kinh-nghiệm bực rọc
Adj-N	unpleasant	EXPERIENCE	kinh-nghiệm bực mình
N-N	work	EXPERIENCE	kinh-nghiệm làm việc
N-of-N	of experience	WEALTH	giàu kinh-nghiệm

3.3 Structural aspects of collocation

The data collected falls into two major categories: regular patterns and non-regular items.

3.3.1 Regular patterns

The regular patterns included collected items whose structure conforms to a certain grammatical patterning. The table below shows different collocational types of regular patterns, their instances, as well as their percentage and ranking:

Collocational types	Instances	Percent	Rank
Adjective-noun	1700	56.6	1
Noun-noun	500	16.6	2
Verb-noun	400	13.3	3
Noun-*of*-noun	150	5	4
Noun-verb	70	2.3	5
Verb-adverb	65	2.1	6
Verb-*and*-verb	35	1.2	7
Adverb-adjective	30	0.8	8
Adjective-*and*-adjective	25	0.7	9
Noun-*and*-noun	20	0.6	10
Adverb-*and*-adverb	5	0.2	11
Total	3000	100	

The above table and its rankings represents my own particular findings from collected data, however, I could possibly assume that whoever collected data such as this, would rank the Adjective-noun combination as having the highest incidence in English. The lowest ranking type, Adverb-*and*-adverb, would possibly be in such a position if data was collected by someone else from other sources.

3.3.1.1 Adjective-noun

The Adjective-noun combination covers approximately 1700 items, representing the largest combinatory group and 56.6 per cent of the collected material. The Adjective slot takes the form of a single-word adjective proper (ie. *cultural, precocious, confirmed, towering*) or a double- or multiword non-noun item functioning as an adjective (eg. *wee-small, ad-hoc, odds-on, clapped-out, fly-by-night, happy-go-lucky, carrot-and-stick, on-the-spur-of-the-moment*). The majority of these items described people, their feelings, relationships, and their associated activities, as well as their natural environments.

A great number of collocated items were found to be either language-specific, or culture-specific, and/or relatively modern in their concept. Both language-specific and culture-specific expressions, together with neologisms or relatively new concept items, are expected to pose potential difficulty in rendition.

As mentioned previously at the beginning of this chapter, the following definitions of collocated items were obtained from my own initial list, and through the use of dictionaries and consultation and discussion with educated English informants, these were refined and often even elaborated upon to give the best possible explanation.

Samples of language-specific expressions are given below in alphabetical order:

activity (tongue-in-cheek): An activity which is meant to be a joke, and is not serious or sincere. The tongue is needed for speech, so to have your tongue in your cheek means that you are insincere in what you say because you are unable to speak properly. Other expressions with 'tongue-in-cheek': (tongue-in-cheek) (advice, remark).

bachelor (confirmed): A man who appears not to ever want to be married, while 'an eligible bachelor' is a man considered to be the right age as well as having the right attributes to make a good husband.

celebrity (clapped-out): A person who has once been a celebrity and is now old and past their prime, but is now held in contempt, is called 'clapped-out'.

cringe (cultural): 'A cultural cringe' means an inferiority complex about your country of origin. A country such as Australia, that was originally a convict colony of England, can suffer from being embarrassed about their origin, thus Australians try to avoid mention of their background or national peculiarities. Another similar combination: (colonial) cringe.

daughter (precocious): This refers to a girl who is considered wise beyond her actual age, both mentally and physically. To say this has a slightly negative, disapproving connotation.

ego (towering): To say a person has a towering ego means they believe they stand above everyone else in ability or status. Towers are more of a feature of Western rather than Asian

architecture, such as in churches and cathedrals, so it is possibly a very apt description of such a person.

favourite (odds-on): An odds-on favourite means something or someone is the most favoured to win something; eg. a horse in a horse race or a candidate for an elected office. The odds in a horse race refers to the prices given on the horse winning; eg. The short odds '5-2 on' means you put in $5 to win $2 only. A similar expression: (hot) *favourite.*

gap (yawning): A gap that is very wide. It gives the image of a mouth opened wide as in a yawn.

hours (wee-small): The period of time which is very early in the morning; ie. between one and three o'clock. The word 'wee' in Scottish means small in amount or extent of time.

idea (on-the-spur-of-the-moment): An idea that happens suddenly. The word 'spur' indicates that like the use of the spur on a horse-riding boot, you are jolted into action.

meeting (ad-hoc): A meeting that happens only when the situation makes it necessary.

operators (fly-by-night): People who operate some sort of money-making scheme, then disappear, seemingly overnight taking other people's money that has been entrusted to them.

person (happy-go-lucky): A person living their life in a very relaxed manner, not concerned for their future. 'Lucky' implies that they don't worry about their life, believing the future will take care of itself. This term looks peculiar and ungrammatical, even in the English language.

policy (carrot-and-stick): A policy which would serve as 'an incentive' in the sense of 'I'll give you something if you give me something else back'. Donkeys have a reputation for being very stubborn. There are illustrations and cartoons with a rider on a donkey holding a stick over the donkey's head with a carrot dangling by a string from the stick, in front of the donkey's head. This makes the donkey keep moving forward always chasing the carrot.

prospect (dicey): An activity which is dangerous or uncertain. A die, the singular form of dice, is used in gambling, so a 'dicey prospect' means something as unpredictable as a gambling result.

puffers (over-the-counter): A type of asthma inhaler which is sold without a prescription from a doctor, thus you can buy it over the counter of the chemist's shop. In Australia, there is a subsidised drug scheme where doctors prescribe special drugs for their patients which the Government allows to be obtained by prescription at a cheaper price than usual.

relationship (on-again off-again): A couple's rocky relationship; meaning sometimes they are together and sometimes they have parted, probably because of arguments.

shifts (staggered): Work shifts that are arranged so that there is no overlapping of workers on the job.

victim (tug-of-love): A child who is torn between loyalty and love for two people, probably having come into being after the high incidence of divorce when parents both love the children but fight for custody. The expression 'tug-of-love' derives from 'tug-of-war' which is a game with two teams pulling on a rope.

virgin (eligible): An eligible virgin is a girl who seems to have everything to make her a good marriage prospect. The term probably came into use when pressure was growing for Prince Charles to provide an heir to the throne. Every young woman who looked like a likely marriage prospect, had details of her former boyfriends published, which was thought to be undignified for a possible future queen. When Diana came on the scene, she was too young to have had a sullied love life, which is why she was considered suitable as a bride for Charles. A similar expression: (eligible) *maid.*

whites (pearly): A nickname for teeth. Teeth are often associated with the white colour of pearls, consequently they are nicknamed 'pearly-whites' in English. Another combination with 'whites': (tennis) *whites.*

world (unsighted): The world of people who are blind. An opposite expression: (sighted) *world.*

zone (smoke-free): An area where no smoking is allowed or, in other words, it should be kept free from smoking. Other similar combinations: (drug-free, nuclear-free, porn-free, thong-free) *zone.*

Some samples of culture-specific terms are:

breakfast (Continental): A breakfast that consists of a hot roll or croissant with some sort of spread or filling, served with coffee. Not an English breakfast, but used on the wider European continent, and in most tourist hotels throughout the world.

bride (mail-order): A woman who answers an advertisement to marry a man living a long distance away who needs a wife. This item came from magazines publishing details of women in the Philippines. Australian men would answer the advertisement and order their bride by mail, in the same manner as other products are ordered from magazines.

dips (creamed-based): Dips are finger-food which are creamy in texture with savoury seasonings into which people 'dunk' a cracker biscuit and then eat the dip and biscuit together. Another similar expression: (savoury) *dips*.

salute (one-finger): It is a rude gesture made with raising your middle finger to show your contempt, which is a very English mannerism indicating the male genitalia and the unspoken expression 'Fuck you!'. Recently, in a court case in Sydney an accused gave this sign to the judge who had just sentenced him to a long prison term. Luckily for the accused, the judge had his back turned and so did not see the gesture.

bread (sliced): Bread that is sold already sliced instead of the householder cutting slices with a knife. In the days before World War II in Australia, bread was sold in a solid loaf. With the advent of mechanised bread-making, people were able to buy sliced bread, so the saying 'the best thing since sliced bread', means that something is innovative and time-saving.

movies (A.O.): An 'Adults Only' movie means a movie suitable only for a person over 18 years of age, who is considered to be an adult, according to Western standards. These films usually have excessive violence or sex. Over the years, movies made in Western countries have been classified according to suitability for a particular audience.

species (endangered): 'Endangered species' means the earth's resources, ie. flora and fauna, which some scientists believe, are heading for extinction if something is not done to protect them for future generations.

zone (towaway): An area where it is prohibited to park your car, or else if you do it will be towed away by the authorities. The car is impounded and you have to pay in order to get your car from the holding area.

Some examples of neologism or relatively new concept expressions are:

backpackers (hitch-hiking): A hitch-hiking backpacker travels by hiking/walking and sometimes waving down a lift from passing cars. Hitch-hikers carry all their possessions in a bag on their back. The traditional Australian swagman carried his meagre possessions in a bed roll on his back, called a 'swag' or 'bluey'.

castration (chemical): Making a man unable to have sexual pleasure through an injection of chemicals to reduce the ability to achieve an erection. In modern times it is considered

barbaric to use surgery as a means of castrating repeated sex offenders, so chemical means are used.

cleansing (ethnic): Racial warfare within a State or country concerning either religion and/or politics. This term came into popular usage during the recent troubles between the Serbs and the Croats in the former Yugoslavia. The reason for the disharmony resulted from both these groups being of different religions; ie. Muslim versus Christian. Also, during World War II they took opposing sides and committed terrible atrocities against each other.

journalism (hearts-and-flowers): Writing that is lighthearted and romantic. Romance is often associated with the symbolism of hearts and flowers, therefore the type of story writing, that is all 'froth and bubble', considered particularly appealing to females, is known by this term. The late Babara Cartland specialized in this form of writing.

man (make-or-break): A 'make-or-break man' not 'a make-or-break woman' or 'person', meaning 'someone whose actions can be decisive in whether something fails or succeeds'. When Diego Maradona, the world famous Argentinian soccer player came to play against Australia in 1996, he was described as the make-or-break man in the team, because Australia was a team to be reckoned with, and Argentina was keen to win.

mother (surrogate): A woman who has agreed to give birth to a baby for another woman. In the wider sense it would mean acting as a substitute for someone else, as is the case with Tiggy-Legge Bourke who looked after Prince Charles' children in place of the late Diana, Princess of Wales.

society (cashless): A society where the usual means of doing business is not with cash money but by other means such as cheques, plastic cards or on the internet. Since the advent of plastic cards, society has become used to dealing with 'no cash' transactions. It is thought that, in the future, all transactions will be carried out in this way, because the financial institutions are phasing out face-to-face customer banking as we once knew.

syndrome (binge-and-purge): 'Binge-and-purge' means eating everything in sight and then going to the toilet and making yourself vomit, usually by sticking your finger down your throat. It's also an aspect of an illness called 'bulimia' and of 'anorexia nervosa' in which a person has an overwhelming fear of becoming fat, and so refuses to eat properly and becomes thinner and thinner. The late Princess Diana was at one time a sufferer from both these diseases. This phenomenon seems to have come into focus in the last 20

years or so. Before that time, eating disorders may have been a fact of life but there was no talk or publicity about them.

3.3.1.2 Noun-noun

The Noun-noun combination represents the second-largest grouping with approximately 500 items and 16.6 percent of the collected data. The headwords in the grouping showed a relatively small range of collocability, the reason being that it is more common in English to use adjectives to describe nouns than to use a noun to describe another noun.

Samples of language-specifics are:

blower (whistle): 'Blowing the whistle on someone' is an Australian expression meaning to 'draw attention to someone'. People who speak out against corruption have now become known as 'whistle blowers' and often suffer severe victimisation for taking this stand.

boomers (baby): In the western world, these are the people born after the Second World War, from 1946-1951. During this time when the war was over and many Western countries experienced high economic growth. These babies born at this time are said to be the luckiest generation ever, in terms of education, jobs, lifestyle. President Clinton of the United States, who was born in 1947, is a clear example of a baby boomer.

budget (shoestring): Not much money to spend on living expenses. The word 'shoestring' is used to indicate a small amount of money. Similar expression: (tight) *budget*.

drugs (fertility): Drugs administered to women who have difficulty conceiving. These drugs often cause the women to produce multiple births. Other combinations with 'drugs': (banned, hard, high-performance, performance-enhancing, powerful, prohibited, revolutionary, soft) *drugs*.

gambler (lipstick): A woman who is a gambler. The word 'lipstick' is used to indicate that the person is female. Other combinations with 'gambler': (problem) *gambler*.

hens (battery): Hens that are kept in small cages to produce large numbers of eggs at least cost to the farmer. This type of farm

is called a battery farm and is widely used in modern day poultry farming.

patriot (sunshine): A person who feels very patriotic only during their country's good times.

Samples of culture-specifics are:

burn (seat-belt): An injury caused by 'abrasion against the skin' by wearing of the seat belt. In an accident the seat-belt can often cause this type of injury around the neck region.

camera (speed): A camera set up at street corners or on stretches of road to catch speeding motorists. The motorist is either pulled up immediately by the police or else sent a speeding ticket by mail.

Day (Red-Nose): Sometimes babies die in their sleep with no apparent illness or cause. This has become known as 'Sudden Infant Death Syndrome' (SIDS). In order to research the causes of this syndrome, Red-Nose Day came into being in Australia. Red plastic clown noses are sold on a date every year as a comical, fun way to raise money and to find the causes, and thus prevent babies from dying in this manner. Other similar expressions with 'day' for fund-raising actitivities: 'Daffodil Day' for cancer research, 'White-Rose Day' for heart disease research.

experience (work): Older high school students spend a fortnight doing a job of their choice in order to give them a realistic experience of the work place, and the type of job or profession they are interested in pursuing.

parade (ticker-tape): A street parade given to honour people, particularly sporting and war heroes. Small pieces of shredded paper are thrown by people from the buildings and offices surrounding the parade. The word 'ticker tape' refers to the paper strip in business machines in the office, which were used in earlier times.

syndrome (tall-poppy): Bringing down someone who has grown taller in stature and importance than everyone else. It seems to be a characteristic of Australian people that when another Australian becomes very successful, that person is criticisized or 'cut down' to the level of other people. Other combinations with 'syndrome': (Down's, stage father, stage mother, Stockholm) *syndrome.*

Samples of relatively new terms are:

airline (no-frills): An airline providing a cheaper service; ie. with no meals and you purchase an airline ticket the same way as

you buy a bus ticket. After supermarkets introduced generic brands, one particular supermarket introduced the words 'no frills' on their products. Generic brands are products with no brand name, therefore they are cheaper. Formerly 'no frills' was an Australian expression meaning, no decoration, no added extras.

bus (booze): Random Breath Testing (RBT) by the side of the road conducted by Police in a bus to detect whether or not people have been drinking alcohol while they drive. This was known as the 'Booze Bus'-- 'booze', being a American slang word for alcoholic drinks. Today, this type of bus is not used as much as it was, Police preferring to take suspects to the nearest police station to undergo further testing, or else using the breathalyser on the driver, when they have pulled the car over to the kerb.

countdown (Olympic): Metaphorically or literally crossing off the days on the calendar as a particular event, such as the Olympic Games, draws closer.

doctor (spin): In the world of politics, the term denotes a person skilled in public relations who presents the candidate in the best image possible. Lately, it has also been used when alluding to film stars and celebrities, as well as Royalty.

tights (Lycra): Form-fitting long pants made from a synthetic material with a sheen called Lycra. Since the rise in popularity of gymnasiums, these have become the fashionable item for exercising.

3.3.1.3 Verb-noun

The Verb-noun combination covers approximately 400 items, representing the third largest combinatory group and 13.3 per cent of the collected data.

Samples of language-specifics are:

acknowledge (the crowd): Give some sign or indication; eg. raise your arms, that you accept the crowd's applause for your performance.

adopt (an attitude): Decide on or change your way of behaving in a given situation or to suit a particular course of action. A similar expression: *take* (an attitude).

bear (a resemblance): A person or thing which carries a similar look or characteristic to someone or something else. Another combination with 'bear': *bear* (a grudge against someone).

beat (shyness): Overcome feelings of shyness or embarrassment. A similar expression: *beat* (the blushes).

break (the ice): When something or someone 'breaks the ice', conversation starts and people begin to relax with one another. The expression refers to social situations when people come together and usually do not know each other. Other combinations with 'break': *break* (the fall, the habit, the journey, the law, the silence, the tradition).

bury (one's face): To hide one's face in your hands or arms on a table, or the like, usually to weep.

cheat (death): When death seems imminent, you somehow cheat death or trick death by escaping its clutches. Survival by a narrow margin. A similar expression: *escape* (death).

crane (one's neck): Stretch or lengthen your neck in order to get a better view of something. 'A crane' is a long-necked water bird. This is a restricted combination.

curry (favour): Increase compliments to someone, in the hope they will favour you in some way. These words have a slightly negative connotation. In Australian expressions, it can mean 'crawling'; ie. lowering yourself to that person, or far worse expressions, such as 'sucking up', 'up his arse' or 'brown-nosing'. The Australian psyche displays contempt for this type of action. This is a restricted combination.

dilate (the pupils): Enlarge the pupils of the eyes through fear, surprise or medication. When people have their eyes tested for glasses, the optometrist inserts drops into the eyes to enlarge the pupils.

draw on (experience): Pulling something out of your experience of life, to enable you to operate in a particular situation you have not previously come up against, or for which you have not been trained. Another combination with the phrasal verb: *draw on* (tradition).

escape (conviction): The court finds you not guilty and you are not convicted for a crime you may or may not have committed. Another combination with 'escape': *escape* (death).

flag down (a passing motorist): If someone has become stranded or isolated, they signal to get a driver to stop and help. The phrasal verb 'flag down' comes from the sport of motor racing where flags are used to send signals to the drivers. Another combination with the phrasal verb: *flag down* (a taxi).

gather (momentum): A situation which may start slowly, but increases or speeds up in intensity.

have (the numbers): To 'have the numbers'; ie. to 'have enough people to ensure'. For instance, in politics, a person might be

elected if he or she 'has the numbers'. In a school or university, a class will be started, depending on whether or not it 'has the numbers', or enough students to continue.

hit (the streets): To become public knowledge; eg. 'When this news hits the streets, it will cause an uproar'. Other combinations with 'hit': *hit* (gold, home turf, home, the headlines, the market, the newstands, the roof, the scene, the shops, the stage, town).

insult (intelligence): To 'insult someone's intelligence' is to underestimate their ability to understand some information given to them, to the extent that it makes them angry. If you 'insult' someone, you offend them by saying or doing something rude.

jig (classes, school): When school students decide to stay away from school without the permission of school authorities or parents, they 'jig school or classes'. Similar expressions: *miss* (classes, school), *skip* (classes, school), *wag* (school), *play* (truant).

jump (bail): 'Bail' is an amount of money that a judge or magistrate decides must be given to a law court before an arrested person can be released, as a way of making sure that they will return to court when it is time for their trial. If a prisoner 'jumps bail', he or she does not come back for his or her trial after being released on bail. A similar expression: *skip* (bail).

launch (a book): To introduce a newly published book and its author to a formal public gathering. Other combinations with 'launch': *launch* (a match-making drive, an attack, an inquiry).

lift (an embargo): For some reason, usually political, trade has been stopped or limited to a particular country and when the embargo has been lifted, trade continues as before. An opposite expression: *impose* (an embargo).

lose (sight of something): Momentarily and metaphorically forgetting a goal or some other piece of information. Other combinations with 'lose': *lose* (a battle, a chance, a contest, a fight, an argument, an opportunity, balance, confidence, direction, face, faith, friends, money, office, one's job, one's life, one's love, patience, people, position, purpose, respect, the sight of one eye, the way, time, weight).

overcome (pride): To overcome your pride, you decide to behave in a way that you do not admire or respect, because you want or need something that is very important to you. A change in your sometimes stubborn attitude towards a person or

situation. 'Come down from your high horse' is another term used in this sense. Similar expression: *swallow* (one's pride).

take (the plunge): This expression is used metaphorically for jumping or plunging into cold or unknown water. It is used as an expression for getting married or going ahead with a venture where the outcome is largely unknown and there's some risk or discomfort involved.

walk down (the aisle): 'A walk down the aisle' refers to 'getting married'. The aisle specifically refers to the centre aisle in a church or cathedral. Traditionally, the bride walks down the aisle beside her father, who then 'gives her away' to the waiting bridegroom. Similar expressions: *get* (hitched), *take* (the plunge), *tie* (the knot).

weigh (anchor): To pull up the anchor and allow the boat or ship to move away from the dock or place of mooring. An opposite expression: *drop* (anchor).

Samples of culture-specifics are:

attend (Sunday School): To go to Christian scripture lessons for young people held on Sunday mornings after, or simultaneously, with the Church service.

conduct (a door-knock): The act of organising volunteers to knock on doors asking for donations from householders for charitable causes.

receive (curtain calls): To receive resounding applause for performing well. When an actor or performer gives a wonderful performance, the audience keeps applauding and calling him or her back to the stage for more applause, at which time the curtain is raised. A similar expression: *take* (curtain calls).

wage (an industrial action): Protest against or go on strike about perceived injustice by an employer. This can take the form of go-slow tactics, 24-hour strikes, sabotage, picket lines. 'To wage something' means 'to conduct or engage in something'. Other combinations with 'wage': *wage* (a battle, a campaign, a war).

worship (Satan): Instead of worshipping God (good Deity), some people worship his opposite, the Devil or Satan. They conduct rituals in the worship of Satan and believe that Evil will overcome Goodness.

Samples of relatively new terms are:

pop (the question): Asking someone to marry you unexpectedly. The word 'pop' indicates the suddenness of such an action.

press (the flesh): Politicians shaking hands with the population when they want to get people to vote for them.

seek (voluntary redundancy): To ask an employer to allow you to leave your job before you are expected to do so. In the days of economic rationalism, when companies want to cut down on staff numbers, they offer redundancy money to whoever chooses to take it, thus avoiding disharmony among their workers. Other combinations with 'seek': *seek* (a partner, advice, an apology, an end to something, assistance, asylum, attention, compensation, damages, feedback, help, refuge).

undergo (a sex change): As a result of hormonal imbalance, some people find that although they have the body of one particular sex, they have the thoughts and feelings of the opposite sex. Sometimes these feelings are so strong that the person undergoes special operations and hormone treatments over time to physically change them into the opposite sex. 'To undergo' means 'to experience or be subjected to something necessary but usually unpleasant'. Other combinations with 'undergo': *undergo* (a breath test, a CAT scan, an operation, back surgery, format changes, tests).

run (the red): Driving through a red stop light, or trying to get through the lights before they change to red. Recently, there appeared a slogan, 'run the red, run the risk' to warn motorists against the danger of racing through a red light.

3.3.1.4 Noun-*of*-noun

The Noun-of-noun combination covers approximately 150 collected items, representing the fourth largest combinatory group and 5.0 per cent of the data. These combinations were predominantly language-specific or culture-specific:

Samples of language-specifics are:

arse-end of the world:

The bottom half of the world. This is a very Australian saying brought back into prominence by a former Australian Prime Minister, Paul Keating, to describe Australia and how he believes it is perceived by the rest of the world, as being backward and uncultured.

brick of cocaine:

A solid piece of cocaine compressed into the shape of a house brick.

coat of paint:

A layer of paint over something, much the same as if you put on a coat as a final layer of clothing for protection.

flock of socialites:

Socialites are people usually women who aspire to or actually are the higher echelons of society. They are often photographed in the social pages of the newspapers and magazines, attending functions, dinners, charity events or parties. A flock usually refers to a group of birds so this expression has the connotation of a group of noisy people, chattering/twittering like colourful birds.

joint of marijuana:

A cigarette specifically containing dried marijuana plant. The word 'joint' alludes to the size of the cigarette which is approximately the length of the joint of a finger.

mother of all battles:

The greatest or worst known family arguments, or fights between countries. This term refers to the biggest in any type of conflict and was used by Saddam Hussein, the leader of Iraq during the Gulf War in 1990 when he threatened to alienate the American forces. He felt that by using an Americanism he would make them understand he meant business.

oodles of talent:

'Oodles' means a great amount. Someone has an abundance of talent as a singer, dancer, musician, writer, etc.

queen of hearts:

This is a suite in a pack of playing cards. In British culture a famous character in a children's book was known as the Queen of Hearts (modelled from the card game). The term has gained a new connotation in recent times. In a speech, the late Princess Diana was lampooned for referring to herself as wanting to be a Queen of Hearts. She simply meant she wanted to be an unofficial ambassador for Britain, and raise awareness of unfashionable injustices and illnesses in the world, and to raise money for these causes. She knew she would never be Queen of England, but she wanted to be thought of affectionately in people's hearts.

skin of one's teeth:

When someone only barely manages to achieve something; eg. I passed my exam by 'the skin of my teeth', which means I got 50 per cent or 51per cent.

Samples of culture-specifics are:

battle of the bonk:

The expression refers to people arguing about other people's noisy sexual behaviour. When people live in close proximity to each other, they are often party to love-making noises which they find distasteful. The term 'bonk' refers to love-making.

battle of the bulge:

The term is applied to people trying to lose weight. In referring to weight loss the expression has created a growth industry in the Western world of weight loss organisations such as Jenny Craig, Weight Watchers, Gut Busters, and even the promotion of gym attendance and personal trainers to keep people 'trim, taut and terrific'. The Battle of the Bulge was a decisive land battle fought between the Germans and Americans during World War II in Europe.

bunch of screaming queens:

A crowd of protesting, noisy homosexuals. The word 'queens' was used for many years to represent gay men. The word 'screaming' refers to their own overt behaviour, particularly at the Gay Mardi Gras. The Gay Mardi Gras is the biggest homosexual gathering in the world, held annually in Sydney in March. It attracts great revenue and tourists to New South Wales.

sea of paparazzi:

A mass crowd of reporters or photographers with vulture-like or uncaring behaviour as to how they gather the news. The term 'paparazzi' was originally coined in the 1950s by Fellini, the renowned Italian film director.

sheet of Hardiflex:

A type of manufactured building material, made by an Australian company, Hardie Australia. It is composed of fibrous cement pressed into flat sheets. Its common name is 'fibro', and many early homes in Australia were built of fibro.

3.3.1.5 Noun-verb

The Noun-verb type represented the fifth largest combinatory group and comprised 2.3 percent of the collected material.

Samples of language-specifics are:

dollar	(dips): Similar expressions: dollar (dives, drops, fallls, slumps, takes a dive), An opposite expression: dollar (strengthens). Another combination with 'dollar': *dollar* (is trading at/around...).
dream	(evaporates): A similar expression: *dreams* (shatter).
fortune	(swings back and forth): Another combination with 'fortune': *fortune* (knocks on one's door).
idea	(runs dry): An opposite expression: *idea* (strikes).
popularity	(sags): A similar expression: popularity (wanes). An opposite expression: *popularity* (soars).
rumours	(fly): Similar expression: *rumours* (fly around).
spirits	(sink): An opposite expression: spirits (soar).
tears	(flow unchecked): Similar expressions: *tears* (roll down one's face, streak down one's face, stream, string down one's face, well up in one's eyes)

3.3.1.6 Verb-adverb

The Verb-adverb combination ranks sixth and covers approximately 65 collected items, representing 2.1 per cent of the data. These combinations were predominantly language-specific:

Samples of Verb-adverb combinations are listed below:

apologize (profusely), *bark* (vigorously), *believe* (genuinely), *blame* (squarely), *celebrate* (hugely), *criticize* (trenchantly), *die* (unnecessarily), *enjoy* (immensely), *gesticulate* (wildly), *give* (generously), *lie* (massively), *link* (inextricably), *praise* (effusively), *read* (voraciously), *refuse* (flatly), *reject* (categorically), *say* (tartly), *violate* (grossly), *vote* (overwhelmingly), *weep* (openly).

3.3.1.7 Verb-*and*-verb

The Verb-and-verb combination ranks seventh and covers approximately 35 collected items, representing 1.2 per cent of the data. These combinations were predominantly language-specific:

Samples of this collocational type are:

break (and enter), *cash* (and carry), *come* (and go), *divide* (and conquer), *duck* (and weave), *eat* (and run), *forget* (and forgive), *give* (and take), *hit* (and run), *search* (and destroy), *stand* (and deliver), *strip* (and search).

3.3.1.8 Adverb-adjective

This combination ranks eighth and covers approximately 30 items, representing 0.8 per cent of the collected data. These combinations were predominantly language-specific:

Samples of this combinatory type are:

(most) *likely*, (absolutely) *necessary*, (profoundly) *deaf*, (remotely) *likely*, (excruciatingly) *long*, (intensely) *loyal*, (sadly) *missed*, (superbly) *rich*, (painfully) *shy*, (chillingly) *similar*, (mortally) *wounded*.

3.3.1.9 Adjective-*and*-adjective

This combination ranks ninth and covers approximately 25 items, representing 0.7 per cent of the collected data. These combinations were predominantly language-specific:

Samples of this collocational type are:

nice (and easy), *dead* (and buried), *clean* (and decent), *fit* (and proper), *hard* (and fast), *high* (and mighty), *alive* (and kicking), *fast* (and loose), *safe* (and sound), *dull* (and lifeless), *high* (and dry), *hale* (and hearty).

3.3.1.10 Noun-*and*-noun

This combination ranks tenth and covers approximately 20 items, representing 0.6 per cent of the collected data. These combinations were predominantly language-specific:

Samples of this combinatory type are:

cat (and mouse), *chalk* (and cheese), *fame* (and fortune), *gloom* (and doom),

heart (and soul),*neck* (and neck), *tooth* (and nail),*trial* (and error), *wetting* (and soiling).

3.3.1.11 Adverb-*and*-adverb

This combination includes five items, representing the smallest combinatory group and 0.2 per cent of the collected data.

Samples of this group below:

here (and there), *there* (and then), *well* (and truly).

3.3.2 Non-regular items

These non-regular items, which do not conform to the above regular patterning, include Sayings, Idioms, Catchphrases, Similes, and Folkverses. The table below shows different collocational types of the non-regular items, their instances, as well as their percentages and ranking.

Collocational types	Instances	Percent	Rank
Sayings	37	37	1
Idioms	24	24	2
Catchphrases	16	16	3
Similes	13	13	4
Folk verse	10	10	5
Total	100	100	

3.3.2.1 Sayings

'A proverb' or 'a saying' is 'a short sentence that people often quote, which gives advice or tells you something about life' (CCED, 1995). This collocational type ranked first in the collected data representing 37 percent of the total.

Samples of proverbs/sayings are:

waste not want not, familiarity breeds contempt, a stitch in time saves nine, more haste less speed, still waters run deep, charity begins at home, crime does

not pay, rats desert a sinking ship, out of the frying pan into the fire, to carry coals to Newcastle,to wait for things to fall into your lap, to have a heart of gold, to kill the messenger.

3.3.2.2 Idioms

'An idiom' is defined as 'a group of words which have a different meaning when used together from the one they would have if you took the meaning of each word individually (CCDE, 1995). A great number of idioms have both their literal and idiomatic senses.

Samples of idioms are:

to have cold feet, to kick the bucket, to give someone the green light, spick and span, to smell a rat, to bell the cat, to leave someone in the lurch, to be in the same boat, to come the heavy, to bite the hand that feeds you, to play with fire, to dress in borrowed plumes.

3.3.2.3 Catchphrases

'A catchphrase' is defined as 'a sentence or phrase which becomes popular or well-known, often because it is frequently used by a famous person.' (CCED, 1995).

Samples of catchphrases are:

You can't be serious, Cop it sweet, Life wasn't meant to be easy, It's not over till the fat lady sings, I wear the trousers round here, Ask and you shall receive, All in the same boat.

3.3.2.4 Similes

'A simile' is defined as 'an expression which describes a person or thing as being similar to someone or something else' (CCED, 1995). Similes are characterized by the use of *'like'*, and *'as ... as'*.

like a Greek God, standing there like stunned mullets, walk like Charlie Chaplin, lips as red as cherries, as green as grass, as flat as a pancake, as easy a pie, as easy as falling off a log.

3.3.2.5 Folkverses

'Folkverse' is 'writing arranged in lines which have rhythm and which often rhyme at the end, and which is traditional and typical of a particular community or nation' (adapted from CCDE, 1995). This collocational type ranked last with 10 percent of the total.

Samples of folkverses are:

Red sky at night, shepherd's delight,
Red sky in the morning, shepherd's warning.

Don't speak with your mouth full.
Don't put your elbows on the table.
Don't reach across in front of people.
Don't leave the table till you're finished.
Don't burp after you have eaten.

3.4 Semantic aspects of collocation

Sense is discriminated by collocation. For the purpose of this study, the collocates are marked by positive [+], negative [–], neutral [0], depending on their connotative senses. The majority of groups of collocates include all three different connotative meanings, while others may contain two or only one of the three types. The following examples show different groups of collocates and their corresponding headwords:

Collocates which have positive, negative and neutral meanings:

accent (beguiling [+]; heavy, thick [–]; foreign [0])

Collocates which have positive and negative meanings:

bachelor (eligible [+]; confirmed [–])

Collocates which have negative and neutral meanings:

mother (grieving [–]; biological, natural, surrogate[0])

Collocates which have positive and neutral meanings:

competition (fierce [+]; track-and-field [0])

Collocates which have all neutral meanings:

partner (dancing, off-screen, stand-in, trading [0])

Collocates which have positive meanings only:

performance (dazzling, giant-killer, heart-tugging, sensational, willing [+])

Collocates which have negative meanings only:

syndrome (binge-and-purge, tall-poppy [–])

One can hardly avoid being subjective, as people sometimes have different views of the world as to what is regarded as good, bad or in-between. Therefore, an impressionistic view of the situation has been taken in this study. For example, the headword *appearance* has its modifiers 'Aboriginal, Asian, Caucasian, Mediterranean, Middle-eastern' which would be regarded as neutral, while its modifiers 'scruffy and token' would be regarded as negative. However, one can argue that 'Aboriginal, Asian, Middle-eastern' would be regarded as negative, and not pollotically correct while 'rugged' could be both positive and negative if alluding to *'appearance'*. The word 'rugged' is sometimes synonymous with 'craggy' as in 'a craggy face' indicating ' a face with large features and deep lines', so it would have a negative quality. However, when it describes the appearance of 'a rugged Australian' indicating 'the face of a strong athletic type of Australian

bushman', the word would be considered to be positive. The headword *'battle'* is another case in point. Its modifier 'hard-fought' can have a positive meaning if a person is fighting an illness, such as cancer, but it can have both a neutral and a negative meaning if it is aligned to talk of war.

To offset the balance, my supposedly subjective viewpoint combined with consultation with educated native speakers of English, aimed to create the most objective view of the collocates as possible. A lack of wider context of use is perhaps a weakness in using this approach, but this seemed to be the only alternative.

There are English words which rarely have a positive meaning such as *'attack', 'drugs', 'death', 'propaganda', 'victim', 'wound', 'war'* and this is evident from the data. As headwords, they colour the expectations that their modifiers will be negative. The word *'attack'* is a case in point. Apart from the collocates 'fundamental', 'hi-tech', 'physical', 'two-pronged', and 'verbal' which can be considered to be neutral, the rest convey their negativeness in their connotation as follows:

attack	(acerbic, barbaric, bitter, callous, cowardly, fatal, frenzied, full-frontal, hit-and-run, premeditated, repeated, sadistic, scathing, spiteful, stinging, swingeing, thinly veiled, vicious, vituperative, xenophobic).

There are also English words which are almost always associated with positive meaning such as *'success', 'support', 'victory', 'win'*. Let's look at the example of *'success'* with its many collocates indicating a positive feeling as follows:

success	(galloping, huge, extraordinary, outstanding, phenomenal, resounding, runaway, tearaway, instant, roaraway).

3.4.1 Semantic fields

For a better observation of lexical sets and their patterns, the data have been divided into two major semantic fields with five subfields each. The field 'People' covered items ranging from 'Appearance', 'Character', 'Life and prospects', 'Human actions', 'Feelings and emotions', 'Relationships' to 'Mishaps'; whereas the field 'Nature' covered items ranging from 'Weather', 'Places' to 'Objects'.

3.4.1.1 People

3.4.1.1.1 Appearance

appearance	(rugged, scruffy, token [–]; Aboriginal, Asian, Caucasian, Mediterranean, mid-eastern [0])
build	(strong, wiry, stocky [+]; thin, heavy, rotund [–]; medium [0])
complexion	(English rose, peaches-and-cream, sun-tanned [+]; acne, scarred, florid, pale[–])
image	(palatable, professional, spitting [+]; aloof [–]; traditional [–])
resemblance	(chilling, striking, uncanny [+])

3.4.1.1.2 Character

accent	(beguiling [+]; heavy, thick [–]; foreign [0])
actress	(world-acclaimed [+]; soft-porn [–])
bachelor	(eligible [+]; confirmed [–])
nurse	(registered, wet [0])
personality	(bubbly, happy-and-sunny [+])
star	(high-flying [+]; hunky, dimunitive [–])
virgin	(eligible [+])
writer	(prolific [+])

3.4.1.1.3 Life and prospects

career	(blossoming, brilliant, burgeoning, dazzling, stellar, top-notch [+]; chequered [–])
chance	(every conceivable, fighting, realistic [+]; bleak, negligible, poor, slender, slim [–])
change	(major [+]; cosmetic [–])
competition	(fierce [+]; track-and-field [0])

condition	(tip-top, satisfactory, stable [+]; critical, serious, severe [–])
economy	(ailing, black, crippled, crumbling, flagging, fragile, sickly, sluggish, stagnant [–])
effect	(profound, stunning, substantial [+]; catastrophic, detrimental, disastrous, intimidating, lopsided, traumatic, uncontrollable, vastly disparate [–]; visual [0])
evidence	(ample, clear, fresh, hard, incontrovertible, mounting [+]; circumstantial, damaging, false [–]; anecdotal, statistical [0])
fact	(bare, established, fundamental, hard, inescapable, irrefutable, known, simple, unassailable [+])
fame	(immense, instant [+]; ill [–])
form	(brilliant, devastating, good, sparkling [+])
future	(bright, forseeable, glittering, immediate, near, not-too-distant [+]; unforseeable [0])
guarantee	(money-back, palpable [+])
inflation	(single-figure [+]; double-figure, galloping, high, rampant, rising, skyrocketing [–])
inquiry	(judicial [0])
law	(organic [+]; draconian, martial [–]; stop-and-search, strict [0])
libel	(scurrilous [–])
life	(ascetic [+]; wrecked, battered, double, unfortunate [–]; entire, eternal, natural, separate, working [0])
means	(illegal, illicit, unlawful [–])
measure	(draconian, drastic, strong, tough [0])
operators	(fast, smart [+]; fly-by-night, sleazy, slick, unscrupulous [–])
opportunity	(gilt-edged, golden [+])
prices	(affordable, asking, competitive, incredible, never-to-be-repeated, ocean-bottom, rock-bottom, unbeatable, unbelievable [+]; inflated [–]; stable [0])
problem	(debilitating, mammoth, thorny, sad, tremendous, unwanted; [–] domestic, endemic, internal, intractable, logistic, marital, financial [0])
prospect	(bright [+]; bleak, dicey, remote, unclear [–])
punishment	(communal, capital, corporal [0])
situation	(detrimental, do-or-die, horrific, nerve-racking, volatile [–])
struggle	(fratricidal, titanic, uphill, violent [–])

success (extraordinary, financial, galloping, huge, instant, outstanding, phenomenal, rattling, resounding, roarway, runaway, tearaway, unbridled, unprecedented, unqualified [+])

victory (come-from-behind, comfortable, crushing, resounding, stunning [+]; hollow, marginal [–])

war (branch-stacking, civil, cold, internicine [–]; forgotten [0])

win (clear-cut, come-from-behind, comfortable, handsome, resounding [+]; upset [–])

3.4.1.1.4 Human actions

act (acrobatic [+]; despicable, illegal, impudent [+])

action (decisive, prompt [+]; provocative, unacceptable, unlawful [–]; retaliatory, industrial, tough [0])

activity (arcane, frenetic, nefarious [–]; entrepreneurial, tongue-in-cheek [0])

addict (full-blown, drug, gambling [–])

aid (charitable, economic, first, foreign, indispensable, legal, military [0])

approach (free-wheeling, practical [+]; gung-ho, jingoistic, patronising [–]; bottom-up, top-down [0])

assault (all-out, domestic, physical, sexual [–])

attack (acerbic [+]; barbaric, bitter, callous, cowardly, fatal, frenzied, full-frontal, hit-and-run, premeditated, repeated, sadistic, scathing, spiteful, stinging, swingeing, thinly veiled, vicious, vituperative, xenophobic [–]; fundemental, hi-tech, physical, two-pronged, verbal [0])

attempt (desperate, strenuous [+]; abortive, botched, bungled, cover-up, fragile, deliberate, misguided [–]; drawn-out, fresh, last-ditch [0]).

attitude (high-minded, healthy [+]; bad, intimidating, lukewarm, patronising, poor, puritanical, stand-offish, subservient, tough, uncompromising [–]; ambivalent, temperate [0])

battle (hard-fought, losing, titanic [–]; legal [0])

behaviour (rowdy, seriously deficient [–])

drugs (revolutionary [+]; banned, prohibited [–]; hard, soft, high-performance, performance-enhancing, powerful [0])

effort (concerted, determined, intensive, relentless, strenuous, untiring [+]; scuttled [–]; last-ditch, pointed, ultimate, conscious [0])

fight	(bitter, heavy, uphill [–]; house-to-house, kith-and-kin [0])
gambler	(compulsive, heavy, problem, excessive [–]; lipstick [0])
gesture	(conciliatory, intimate, significant [+]; empty, token, untidy [–]; predictable [0])
killer	(brutal, callous, serial [+]; psychotic [0])
majority	(absolute, overall [+]; parliamentary, relative [–]; simple, slim, small [0])
meeting	(acrimonious, sparsely attended, stuffy, turbulent [–]; ad-hoc, plenary [0])
mission	(diplomatic [+]; gun-running, spying [–])
move	(quick, bus-a-boozer, popular [+]; deliberate, unprecedented, perfidious [–]; protectionist [0])
nation	(soft, touch, soft-touch [–])
party	(Communist, Conservative, Democratic, Labour, Liberal, Nationalist, Republic [0])
performance	(dazzling, giant-killer, heart-tugging, sensational, willing [+])
policy	(carrot-and-stick, concerted, dual-tract, even-handed, many-friends, open-door, sensible [+]; closed-door, deliberate, shoot-to-kill, short-sighted, vicious [–]; fiscal [0])
position	(prominent [+]; hard-line, military, soft-line [+]; domestic, overall [0])
propaganda	(bombastic, false, hostile, ludicrous, malicious subversive, provocative, sickening, whipped-up [–]; nationalistic [0])
protest	(stone-throwing [–]; can't-pay-won't-pay, strong [0])
spree	(shooting [–]; shopping, spending [0])
strike	(pre-emptive, token [0])
syndrome	(binge-and-purge, tall-poppy [–])
victim	(mugging, shooting, tug-of-love, suicide [–])
violence	(brutal, domestic, excessive, gratuitous, sexual [–]; communal, non-lethal, on-screen, real-life [0])
walk	(brisk, specially-tailored [0])

3.4.1.1.5 Feelings and emotions

admiration	[unabashed (+)]
ambition	[burning, high, lofty [0)]
anxiety	[severe (–)]
desire	[unquencheable (0)]
despair	[bottomless (–)]

experience	[fantastic, first-hand, hands-on, stunning, thrilling (+); appalling, bitter, daunting, earth-shattering, frightening, horrendous, humiliating, life-threatening, near-death, shattering, terrifying, traumatic, undesirable, unnerving, unpleasant (–); out-of-body (0)]
euphoria	[spectacular (+); absurd (–)]
fear	[constant, extreme, intense (–)]
feeling	[hard, hardened (–); mixed, rank-and-file (0)]
grin	[mile-wide (+)]
hope	[high (+); dwindling, false, forlorn, low, fragile (–); unbelievable (0)]
memories	[cherished, fond, strong (+); faded (–); everlasting, lingering (0)]
morale	(good, high [+]; falling, low, poor, sinking [–])
smile	[benign, contagious, ready, winning (+); coy, ingratiating, wan, wry (–); shy (0)]
sobs	[racking, strained (0)]

3.4.1.2.6 Relationships

brides	(mail-order [0])
family	(homeless [–]; blended, extended, nuclear [0])
friendship	(hard-won [0])
husband	(distressed, estranged, jilted [0])
love	(instant [+]; lost [–]; bitter-sweet [0])
marriage	(perfect [+]; failed, farcical, fragile, loveless, troubled [–]; monogamous [0])
mother	(grieving [–]; biological, natural, surrogate [0])
parents	(prospective, biological, birth, natural, real; [+] distraught, estranged [–]; adoptive [0])
partner	(dancing, off-screen, stand-in, trading [0])
relationship	(improper, rocky, violent, on-again off-again [–]; private, physical, platonic [0])

3.4.1.2.7 Mishaps

accident	(alcohol-related, appalling, at-fault, fake, fatigue-related, hit-and-run, speed-related [–]; freak [0])
collision	(head-on, mid-air [–])

damage	(slight, superficial [+]; considerable, extensive, immense, incalculable, serious, widespread [–])
death	(accidental, bitter, fake, senseless, suspicious, tragic, unnecessary, untimely [–])
injuries	(minor, superficial [+]; horrific, terrible [–]; abdominal, internal, orthopaedic, spinal [0])
passengers	(stranded [–])

3.4.1.2 Nature

Collected items cover roughly three domains; namely, weather, places and objects.

3.4.1.2.1 Weather

rain	(driving, heavy, pouring, torrential [–]; intermittent, patchy [0])
storm	(violent [+]; freak [–]; electrical, tropical [0])
weather	(tugged, tempestuous, unsettled [–])
winds	(high, strong [–])

3.4.1.2.2 Places

area	(nightsafe [+]; confined, secluded, unclad [–]; built-up, residential [0])
country	(drought-ravaged, famine-ravaged, war-torn [–]; far-off, land-locked [0])
society	(computerized, high [+]; cashless [0])
world	(Free [+]; frenetic, uncertain, unfriendly [–]; corporate, natural, sighted, temporal, unsighted [0])
zone	(no-fly, no-go, towaway [–]; demilitarised, nuclear-free, porn-free, smoke-free, thong-free [0])

3.4.1.2.3 Objects

gun	(smoking [0])
knife	(double-edged, serrated, silver-plated [0])
lock	(crook, dead, steering [0])

3.4.2 Semantic ranges

Collected collocations are broadly grouped into three categories depending on

their range of collocability.

3.4.2.1 Unrestricted collocation

This category includes the headwords which are open to partnership with a wide range of items (Carter, 1987: 63). Some samples are:

to hit	(gold, home, the hardest, the headlines, the market, the newstand, the roof, the scene, the screen, the shops, the stage, streets, town).
to look	(bleary-eyed, angst-ridden, bedraggled, bemused, chirpy, deflated, elegant, full of smiles, happy, gorgeous, puzzled, sluggish)

The noun 'smile' has nine different adjectival collocates:

smile	(benign, contagious, coy, ingratiating, ready, shy, wan, winning, wry)

The noun 'attack' attracted a large number of 33 modifying collocates as collected in the data, eight of which combine with another noun:

attack	(arson, guerrilla, hi-tech, machete, stab, twin, assassination, coup)

and 25 instances with an adjective:

attack	(acerbic, barbaric, bitter, callous, cowardly, fatal, frenzied, full-frontal, hit-and-run, premeditated, repeated, sadistic, scathing, spiteful, stinging, swingeing, thinly veiled, two-pronged, verbal, vicious, vituperative, xenophobic, abortive, botched, bungled)

3.4.2.2 Semi-restricted collocation

This category embraces headwords in which the number of collocates which can be substituted in different syntactic slots are more determined (Carter, 1987: 63). Samples of this are:

meagre	(beginning, living, supply, wage)
plum	(job, offer, position)

3.4.2.3 Restricted collocation

Partnerships in this category are generally more fixed and closed (Carter, 1987: 63). Some headwords had only a single collocate as observed in the data:

boots	(squelch)
flames	(lick the walls)
shoulder	(room)
gesticulate	(wildly, boiterously)
violate	(grossly, blatently)
hale	(and hearty)
push	(and shove)
rich	(and famous)

3.5 Thematic aspects of collocation

The themes used here should not be confused with the normal theme-rheme dichotomy used in other linguistic studies. Thematic aspects or patterns only serve the purpose of culturally grouping the collected items.

Observations of the data make it possible to classify the collected collocations into eight major themes, which are reflective of Western concepts and ways of thinking. These themes are 'colour', 'time', 'appearance', 'weather', 'relationships', 'appreciation', 'faith' and 'entertainment'.

3.5.1 Colour

Colour terms are found to be associated with a wide variety of domains related to 'beauty', 'feelings', 'injuries', 'road safety', 'luck', 'beliefs', 'human character', and 'social class'.

3.5.1.1 Beauty

With regard to beauty of the face, the colour 'red' or 'crimson' is used to describe a woman's lips. The colour 'white' describes her teeth, whereas the colour 'black' is

associated with 'coal' or 'jet' as in 'coal black' or 'jet black' in describing the 'deep and unusually beautiful and dark eyes' in literature. However, colour terms such as 'blue', 'hazel', 'brown', or even 'green' commonly co-occur with a Caucasian's eyes. It is interesting to note that the restricted combinations 'auburn hair' and 'blond hair' refer to hair on the head only. Below are some of the expressions describing beauty:

lips as red as cherries, crimson lips, white teeth, pearly whites, coal black eyes.

3.5.1.2 Feelings

In expressing feelings and emotions, the colour 'red' indicates 'anger'. 'Red' is the colour of the cape used to provoke the bull in a bullfight, firstly because humans believe it angers the bull, and secondly, because it hides the colour of the blood. The colour 'blue' shows 'sadness'. 'Pretend you're happy when you're blue' in the song 'Pretend' sung by Nat King Cole, points out how people believe that when we are sad we feel blue. 'Green' denotes 'jealousy' as in 'green with envy'. 'Black' evokes 'sadness and/or anger', depending on the context in which it is used, whereas 'pink' suggests 'happiness and healthiness'. Examples below:

see red, feel blue, a black mood, a green-eyed monster, green with envy, think pink, in the pink.

3.5.1.3 Injuries

In the area of injuries, the term 'black' collocates with 'eye' to describe someone who has been punched in the eye. If a person had both eyes punched, their injury would be described as having 'two black eyes'. Also, in relating to fighting, a person can be punched until he or she is seriously injured; ie. till he or she is black and blue. Examples below:

a black eye, (He was punched till he was) black and blue.

3.5.1.4 Road safety

Colour terms play a part in a road safety regulations within Australia in that, the term 'pink' connotes 'good condition after inspection', and 'green' refers to 'third party compulsory insurance'. In New South Wales, for a vehicle to be considered roadworthy, the owner must obtain 'a pink slip' and 'a green slip' before full registration is granted. The pink slip is issued by the garage where the vehicle is inspected. A vehicle over three years of age undergoes rigorous inspection and if it passes this inspection, the inspection certificate or pink slip is given to the Motor Registry by the vehicle owner together with the green slip which is a third party compulsory insurance certificate. It is only after these certificates have been obtained that a vehicle can be considered roadworthy and then registered. Traffic lights make use of three colours (four if both alternatives 'yellow' and 'amber' are included) terms: 'red' meaning 'stop', 'green' meaning 'go', and 'yellow' or 'amber' indicating 'to slow down and stop'. Examples below:

a pink slip, a green slip, red light, green light, amber light.

3.5.1.5 Luck

English people often associate the colour 'black' in gambling with 'bad luck', whereas 'gold' symbolizes 'good luck'. Gold signifies luck and wealth in English; however, in Vietnamese parlance, there is no distinction in terminology between 'gold' as a metal and 'yellow' as a colour. The expression 'he found his pot of gold at the end of the rainbow' alludes to the Western belief that great wealth lies at the end of a rainbow in the form of 'a pot of gold' guarded by a leprechaun.

Examples below:

a black cat crosses your path, he found his pot of gold at the end of the rainbow, he struck gold, a pot of gold.

3.5.1.6 Beliefs

In expressing people's beliefs, the term 'yellow' evokes a feeling of fear--the fear held by Australian white people that yellow-skinned people may one day dominate them. 'Blue' is the colour usually associated with clothing baby boys in the Western context, while 'pink' is the colour reserved for clothing baby girls. The colour 'red' indicates 'wild celebration' and 'over-indulgence' as in the idiom 'to paint the town red'. But 'red' as in 'the red carpet treatment' refers to 'extra-special attention' given to an important person or a group of people when they visit another important person or country. The colour term 'red' also connotes Communism. In Australia, 'red' is believed to symbolize 'power'. Among politicians and power brokers the 'red necktie' is a favourite 'power-dressing item' which indicates that one wishes to be in control of circumstances. In recent times, it has been supplanted by the 'yellow tie'. Examples below:

yellow peril, to paint the town red, the red carpet treatment, Red China, red necktie, power-dressing item, yellow tie.

3.5.1.7 Human character

A person's character or skill, be it good or bad, can sometimes be explained using colour words. The colour 'yellow' or 'white' connotes 'cowardice'. When a person is called 'yellow', he or she is considered 'a coward' and would be given 'a white feather'. In the time of Queen Victoria in England, a man who did not join his friends in going to fight was often sent 'a white feather' as a sign that he was regarded as a coward. The colour 'black' equates with 'nastiness'. The word

'blackguard' is an old-fashioned expression meaning 'a scurrilous person', particularly a man. The term 'scarlet' evokes the meaning of 'adulterous'. In early times a Christian woman who was an adultress was called 'a scarlet woman' and was forced to wear 'the scarlet letter A' on her clothing for all to see. The colour 'green' is used to describe a person who is good at gardening. The colour 'green' in association with 'light' yields the sense of 'permission'. Examples below:

> *a white feather, a blackguard, a scarlet woman, a green thumb, given the green light.*

3.5.1.8 Social class

Colour terms are used to indicate people of the different social classes. The term 'purple' or 'blue' connotes 'noble'. The expression 'a blue blood' meaning 'to be of noble birth' comes from the days of the Crusades when the dark-skinned enemy saw the white skin on the hands of the English knights showing the 'blue-coloured veins', and so consequently thought they had 'blue' instead of 'red blood' [*The International London Express,* 1996]. However, 'blue' in combination with 'collar' and 'worker' infers that someone is 'of the working class'. The colour 'white' when co-occurring with 'collar' and 'worker' is to indicate that someone works in an office rather than doing manual work. Examples below:

> *born to the purple, a blue blood; blue-coloured veins, a blue-collar worker, a white-collar worker.*

3.5.2 Time

Expressions of time, from the findings, have shown to be associated with a range of concepts regarding 'measurement', 'value', 'prevention', 'competition', and 'periods of a person's life'.

3.5.2.1 Measurement

The measurement of time produces a few combinations of words. In Westernized countries of old, the passing of time was not measured by time-keeping devices such as clocks or watches. Natural phenomena such as sunrise or dawn, and sunset or dusk played a major part in some people's reckoning of time, and primitive measuring devices such as 'shadow poles', 'sun dials', 'hour glasses' were used. Feelings of melancholy are often associated with the early hours just after midnight. Examples below:

shadow poles, sun dials, hour glasses, wee-small hours.

3.5.2.2 Values

Various aphorisms are used to indicate how valuable the passing of time can be in the everyday life of a human being. One should not waste one's time or delay one's work until tomorrow what can be done today. Eating too much should not be considered as a sensible course of action.

Time and tide wait for no man; procrastination is the thief of time; he who hesitates is lost; a stitch in time saves nine; a minute on the lips, a lifetime on the hips.

3.5.2.3 Prevention

Although the importance of being a virgin is not given that much credence in Western society, prevention against out-of-wedlock pregnancy which was a social stigma, appeared to be a sensible course of action, particularly before the invention of 'the Pill' for birth control in the 1960s. Another form of prevention which promises a longer life-span is found in the often-cited slogan of a no-smoking campaign. Examples below:

Five minutes of fun and nine months of worry, the morning-after pill, Quit for Life.

3.5.2.4 Competition

In any sport contest or competition, winning or losing is 'the name of the game'. Expressions are found to indicate something is finished, is near to finishing, or to show that the distance between something or someone was so close that a photograph would have to determine the winner. Other expressions used to indicate a close finish describe the situation in which there are two equal winners, or to state that someone suddenly comes to the fore unexpectedly to win. Examples below:

game, set and match; in the home straight, photo finish, win (by a whisker, by the skin of one's teeth), a dead heat, a come-from-behind win.

3.5.2.5 Periods of a person's life

Word-combinations are also found to be associated with certain periods of time in a country's history or a person's life. 'Baby boomers' refer to people who were born between the end of World War II and the early 1950s. 'Midlife crisis' refer to the period of a person's life when they start to question their achievements, specifically at the age of around 45 years and over.

baby boomers, economic boom, double-digit inflation, midlife crisis, an eligible virgin, a confirmed bachelor, an eligible bachelor.

3.5.3 Appearance

Descriptions of men and women have resulted in many interesting word-combinations which cover a wide range of concepts of 'clothing', 'race', 'shape and size', and 'beauty'.

3.5.3.1 Clothing

In countries such as England, America and Australia there is no one traditional costume as one would find in Western and Eastern European countries. Australian people are often accused of 'dressing-down' rather than 'dressing-up', which probably reflects the casual lifestyle and the warm weather. Australian men in particular are often depicted overseas as wearing singlet, shorts, thongs and a 'cloth hat', and clutching a can of beer in one hand while relaxing outdoors 'at the barbie' or 'on the beach'. This image has arisen because people from overseas have come to associate Australia with sunshine and a relaxed style of living. However like many popular images this is not truly indicative of the Australian people.

Modern day fashion, in Australia in particular, follows that of America, especially the youth of the country. 'Baggy shorts', 'T-shirts with logos', 'fashion-name footwear' and 'baseball caps worn back-to-front', appear to be the uniform for the youth of Australia in the 90s. However, business people still wear heavy suits and a collar and tie to work, which seems ridiculous in the summer heat but is a carry-over from British tradition. This form of dressing is called 'power-dressing', to indicate that one wishes to be in control of circumstances. Another favourite power-dressing item is the 'red necktie', and more lately, the 'yellow necktie'. Examples below:

> *cloth hat, dressing-up, dressing-down, baggy shorts, T-shirts with logos, fashion-name footwear, baseball caps worn back-to-front, power-dressing, yellow necktie.*

If an English-speaking person wants to express that he is going to do hard work, the expression would probably be 'I'm going to roll up my sleeves'. Another

favourite saying is 'Who's wearing the pants in the house?' meaning 'Who is the boss?'. This brings to mind a British cartoon depicting the Queen and Margaret Thatcher, the Prime Minister of Britain at the time, standing side by side and both wearing skirts and carrying handbags. The caption of the cartoon quotes the Queen as saying, 'There's one thing I'd like to get straight, I'm the one who's wearing the trousers around here.' Examples below:

I'm going to roll up my sleeves, Who's wearing the pants in the house?

A rather ribald saying used by Australian men to indicate they fancy a woman is 'I'd like to get into her pants'. And a man who is a philanderer is called 'a pants man'. The term 'a smartie-pants' is used to refer to someone who has a wide knowledge on many topics. Examples below:

I'd like to get into her pants, a pants man, a smartie-pants.

Clothing and the ways of wearing clothing differ from culture to culture, and are also reflective of life-style and temperatures experienced by the various people. Australian soldiers are renowned for wearing a 'slouch hat', and the 'Akubra hat' has been made popular by golfer Greg Norman. The 'cork hat' is actually a joke today, but was worn years ago by men in the Australian outback to keep the flies off their face. It was a felt hat with corks tied to strings ranged at intervals around the brim of the hat. Examples below:

(Akubra, cloth, cork, slouch) hats; Driazabone coats; T-shirts, navy-blue singlets; (Bermuda, baggy) shorts; King Gees; leather riding boots, fashion-name footwear.

3.5.3.2 Race

'Wanted people' or 'crime suspects' are often described according to their race or their geographical region of origin:

Wanted people, crime suspects, (Caucasian, Aboriginal, Asian, Middle-eastern, Mediterranean, Pacific Islander) appearance.

3.5.3.3 Shape and size

Shape and size are also taken into account in describing suspects. A man can be describe as 'barrel-chested', 'pidgeon-chested' if they are big in the chest as compared to the rest of their body. If he is described as 'thick set', 'heavy set', he is usually short with a strong-looking body. A thin person would be described as 'thinly/slightly built', having the 'waif look', 'fine-boned, 'small build'. People who have very thin legs are described as having 'spindly legs'. Examples below:

(thinly, slightly, solidly) built, (small, medium, strong, stocky) build; thick set, heavy set, barrel-chested, pidgeon-chested, spindly legged.

The female sex may be given different titles and descriptions of women also produce interesting combinations. A woman who is big would be described as 'big busted', having 'big boobs', or 'big-hipped', 'heavy-boned'. The terms 'flat-chested', 'buxom blonde', 'heavy thighs', 'thick ankles' are used derogatorily to describe women. Examples below:

the (fair, fairer, weaker) sex; buxom blonde; (strawberry, platinum) blonde; heavy-boned, fine-boned; the waif look; flat-chested, big busted, big boobs; big-hipped, heavy thighs; thick ankles.

3.5.3.4 Beauty

Beauty, as has been quoted, is 'in the eye of the beholder', and again we come across word-combinations to indicate this concept in a woman. Beauty in a man is described as being like 'a Greek God'; however, if the man is not considered very intelligent a woman may describe him as 'all brawn and no-brains'. 'A he-man' is usually a strong powerfully-built man with very much male characteristics, that give the impression of strength. Examples below:

in the eye of the beholder, (almond, wide, doe) eyes; (full, thin) lips; (high, prominent) cheekbones; (round, heart-shaped, oval) face; (even, big) teeth; (swan-like, elegant, thin) neck; (flat-chested, full-bosomed, busty) figure; (wasp, hour-glass) waist; a Greek god, all brawn and no-brains, a he-man.

Complexion also has a bearing on how a person can be described, and can refer to the colour as well as the condition of the skin. Western people, particularly Australians, tend to show their age quicker than other races because of unprotected exposure to the sun, so various expressions are used to describe their facial skin. Examples below:

(pock-marked, florid, peaches-and-cream, pale, sun-tanned, acne-scarred, English rose) complexion; (etched, deepened, lined) with wrinkles, (parched, cracked) lips.

3.5.4 Weather

Weather in Western society is usually an overture to a conversation, and covers many aspects of life and concepts involving 'greeting', 'forecasting', 'feeling', and 'temperature'.

3.5.4.1 Greeting

In Vietnamese culture, the weather is not an overture to conversation as it is in the English-speaking world. The usual way of starting a conversation, particular among people of lower class, is to say 'Have you had your meal yet?'. Western people, unlike Vietnamese people, often greet each other with comments about the weather.

In Australia, the weather and its effect on the environment produce interesting word-combinations. A 'light show' refers to lightning storms experienced in Central Australia which are very spectacular. 'The Wet' is the tropical rainy season in the North of Australia between the months of November and March. Examples below:

(Hello, it's) a lovely day, (isn't it?); (Isn't it) terrible weather (It's) raining cats and dogs; a (wet, dry) spell; The Wet; tropical rain forests; arid deserts; flooding rains; sun-burnt country; tropical rain-storm; a light show.

3.5.4.2 Forecasting

Weather forecasting is often passed down from generation to generation in the form of sayings and rhymes. In olden times, and even today in the Third World, shepherds look after their sheep because they are the vital source of milk as well as meat, and are also valuable as breeding stock. If the sunset is red colour, it means the next day will be fine weather, but if the sky is red in the morning, it means the shepherd must keep his sheep safe from what is usually a warning that there will be a storm. Hence the saying:

Red sky at night, shepherd's delight; Red sky in the morning, shepherd's warning.

3.5.4.3 Feelings

When it comes to feelings and actions, several weather terms could be used. Feelings are often expressed in weather terms because all human beings and animals respond to changes in the weather. A person is thought to bring great happiness to someone, as does the sun when it shines, hence 'you're my sunshine'. 'To cook up a storm' means to cook so much that it leaves people feeling disoriented, as does a storm. 'To have a face like thunder' means to have an expression on your face that would terrify someone just as thunder does. 'To be under a cloud' indicates that you are not experiencing good times. 'To be on cloud nine' means you are happy beyond all reasoning.

(You are) the sunshine of my life, (You are) my sunshine; (She) cooked up a storm; (She had) a face like thunder; (His) life (was) under a cloud; on cloud nine.

3.5.4.4 Temperature

Temperature is usually associated with the vagaries of the weather. Weather terms, for which there are no Vietnamese equivalents, are 'a cold snap', meaning 'the weather has turned suddenly cold when before it was warm and pleasant'; 'a heat wave' meaning 'people experience long, endless periods of intense heat both day and night which is only finally relieved by rain or cool breezes'; 'a nip in the air' suggests 'a feeling that the air around you has a biting quality of being cold and frosty'. The term 'cold war' is used to indicate rivalry between countries, just short of military conflict. Examples below:

> *a cold (snap, change, front); a heat wave, a warm spell, a nip in the air; a heat wave, cold war.*

Another popular saying is 'it's so cold it would freeze the balls of a brass monkey'. Despite this saying sounding as though it has a bawdy explanation, the real origin is nautical, dating back to the days of wooden fighting ships, when the cannon balls were held in a cradle known as 'a monkey'. In extremely cold weather the brass often fractured, and thus the cannon balls would fall onto the deck of the ship. Example below:

> *it's so cold it would freeze the balls off a brass monkey.*

3.5.5 Relationships

Human relationships cover another wide range of concepts of 'love', 'marriage', 'sex', 'divorce', and 'old age'.

3.5.5.1 Love

'Love' even if it be 'bitter-sweet' or 'lost' is always popular and usually associated with the ultimate ending; ie. marriage. A marriage can be described

as 'failed, farcical, fragile, troubled, in crisis, on the rocks' if it does not work out, but if it is a happy marriage one can describe it as 'perfect, monogamous, made in Heaven'. Of course, in all relationships, one can find different words to describe *'love'* such as 'improper, physical, Platonic, private, rocky, violent, on-again off-again'. Examples below:

> *(bitter-sweet, lost) love; (tie the knot, walk down the aisle, take the plunge, get hitched, (failed, farcical, fragile, troubled, perfect, monogamous) marriage, marriage (in crisis, on the rocks, made in Heaven); improper, physical, Platonic, private, rocky, violent, on-again off-again.*

Romance can happen very quickly. During the courtship, lovers often indulge in a variety of phone conversations; some of which have gained notority, as in the case of Prince Charles and the late Princess Diana.

> *a whirlwind romance, (intimate, amorous, lovey-dovey) phone conversations.*

3.5.5.2 Marriage

Finally when a man decides to ask the girl to marry him he will 'pop the question', 'make a proposal of marriage', then they will hopefully settle down. If the permission is sought from the father, he is said to do something on his daughter's behalf. Examples below:

> *pop the question, make a proposal of marriage; wedded bliss, give the daughter away, give the daughter's hand in marriage, give his consent.*

Marriages are often 'engineered' when the couples resort to finding a partner and sometimes people marry for profit or gain, rather than love. People in Australia also do not worry if their partner is 'above or below their station' meaning whether they are equal to them in terms of social status or not, or whether they are 'a person of modest or substantial means'. Examples below:

> *(match-making, introduction, dating) agencies, a marriage of convenience, a mail-order bride, above/below their station, a person of modest/substantial*

means.

In most Western societies today in Australia, couples settle for co-habitation 'de facto relationships' and such terms as 'my (partner, other half, significant other)'. are substituted for 'husband' and 'wife'. In marriage there can be 'a battle of the sexes' as some men subject their wives to 'a touch of male domination' and expect them to have '(domestic, nappy-changing, home-making) skills'. However, most women today will not put up with 'domestic (violence, abuse, assault)' and Social Security payments help them to escape this situation. Examples below:

> *de facto relationships, my (partner, other half, significant other), a battle of the sexes, a touch of male domination, (domestic, nappy-changing, home-making) skills, domestic (violence, abuse, assault).*

3.5.5.3 Sex

'Sex' goes hand in hand with the rites and rituals associated with love and marriage. Years ago a man was expected to 'sow his wild oats', and consequently there were often 'shotgun weddings' where the man was forced to marry the pregnant bride at the point of a gun held by the girl's father. This did not sit well if a man was 'a confirmed bachelor' or 'aisle-shy' as was Sylvester Stallone in having to take back Jenifer Flavin after her short romantic liaison with James Packer. Today, people sometimes indulge in 'kiss-and-tell stories' if they seek revenge against a lover who has spurned or rejected them. Examples below:

> *sow his wild oats, shotgun weddings, a confirmed bachelor, aisle-shy, kiss-and-tell stories.*

With this sexual freedom came the proliferation of many sexually transmitted diseases, the most virulent of all being AIDS, and so Westerners once again saw condoms in use, not as a birth control mechanism but as a protection against disease. Condoms were used as well as 'coitus interruptus', in older times.

Some Australians used to express the latter practice in their own inimitable way as 'getting off at Redfern'. This saying referred to the railway line in Sydney which used to terminate at Central Station, while Redfern was the train station before you reached Central:

coitus interruptus, getting off at Redfern.

3.5.5.4 Divorce

The children of a relationship which goes wrong often become the 'tug-of-love victims'. Whether they have '(biological, birth, natural, genetic, adoptive) parents', whether they are '(gifted, healthy, retarded) children', parents will still fight for custody. Many children take to the streets because of being victims of 'a miserable childhood' and many have 'heart-rending stories' to tell of '(physical, sexual, emotional) abuse'. Examples below:

tug-of-love victims, (biological, birth, natural, genetic, adoptive) parents, (gifted, healthy, retarded) children, street kids, a miserable childhood , heart-rending stories, (physical, sexual, emotional) abuse.

3.5.5.5 Old age

'(Elderly, senior) citizens' also play a part in family relationships, but in Australia they do not live with children, but rather opt to live in a retirement village or a nursing home, especially where leisure amenities as well as medical and hospital facilities are available. Also, these grandparents often have more money and influence than ever before and assume titles which give them esteem. Examples below:

(Elderly, senior) citizens, retirement (villages, homes); nursing homes, Grey power, the Third Age, the golden age.

3.5.6 Faith

Expressing one's beliefs, be it religious, political or superstitious, has produced collocations pertaining to 'religion', 'occultism', 'government', and 'politics'.

3.5.6.1 Religions

The most practised Christian religion in Australia is the Roman Catholic religion and equates most with the monastic life of older times. A person may wish to practise a particular religion, whether it be Catholicism or Protestantism:

> *become a nun, be married to Christ, become brides of Christ, take the vow of celibacy, enter the priesthood, become a priest; take to the cloth, be ordained, enter the church, become (a minister, a deaconness), be a man/woman of the cloth.*

Rites and rituals are also part of a person's belief in the Christian religion:

> *take Holy Communion, be confirmed, attend Mass, conduct (a Requiem, a Nuptial Mass); (say, recite) the Rosary, take confession, pray to (the Virgin Mary, the Holy Trinity, God); sing hymns; preach sermons; read from (the Scriptures, Bible); attend Sunday School.*

There are also 'fringe religions' whose basis is Christianity, but whose ministers are usually not ordained and are very flamboyant. The theme of their preaching often mentions damnation and hellfire if people do not heed their message. Their rituals are often outside the normal religious practices. 'Speaking in tongues' is a foreign or unknown language spoken by any member of the congregration who is usually in a type of trance. The 'laying-on of hands' is used to supposedly heal people of illness by the Holy Spirit entering the body through the preacher's hands. Examples below:

> *fringe religions, holey-rollers, hot gospellers, fire and brimstone preachers, speaking in tongues, laying-on of hands.*

3.5.6.2 Occultism

Yet another form of faith is that placed in the study of the occult and astrology. In a Western culture one usually asks 'What's your star sign?' or 'What star were you born under?', and if they suffer adversity they may use astrological terms to indicate that it was the influence of astrology that caused it to happen.

The occult holds a fascination for many people and the belief that one can communicate with the dead also gives rise to words associated with the practice of occultism. The 'ouija board' is often used by Westerners who consider it more of a party game than a serious means of contacting the dead. Harry Houdini, the famous escape artist, spent a great amount of his money trying to find out if humans could contact the dead through mediums, when his mother, whom he loved very dearly, died. Examples below:

> *What's your star sign?, What star were you born under? The stars are against me, the stars must be in the wrong place, speak through a medium; consult a clairvoyant; speak to (the dearly departed, the spirits); read (the cards, your palm); hold a seance, ouija board.*

'Black magic' or 'the black arts/witchcraft' is not recognised as a religion but is sometimes practised, and this too has its rituals:

> *Black magic, the black arts/witchcraft, sacrificial offerings, satanic chanting, Satan worship.*

3.5.6.3 Government

The democratic form of government in Australia is subject to the election of one of two parties every four years or when the party so wishes. There are also many words associated with the running of government that are alien to Vietnamese thinking.

> *hold an election, force an election, hold a by-election, have a Double Dissolution, Shadow (Government, minister); (front, back) benchers; Member of*

the Inner Cabinet.

3.5.6.4 Politics

To mention government is also to talk about politics, and the voting process which is compulsory for every adult in Australia. Candidates for election must subject themselves to contesting a seat in the hope of sitting in Parliament. Once elected, a Parliamentarian may be required to undertake a variety of functions. The term 'pork-barrelling' means the use of patronage for political advantage, and a 'Dorothy Dix question' is one that is asked by a member of the same party to his fellow parliamentary member in order for that member to fully put forward the party's point of view in the Parliament.

> *enter on the electoral roll, enrol to vote, cast a vote, contesting a (safe, unwinnable, marginal) seat, sitting in Parliament, taking a seat in Parliament, becoming a sitting member, cross the floor, table a bill, push the bill through, pork-barrel, ask a Dorothy Dix question, practise gutter politics.*

There are quite a few word-combinations in the collected data associated with government and politics:

> *political asylum, bloodless coup, (gunboat, backstairs, shuttle) diplomacy, political exil, economic embargo, nationalistic propaganda, late deposed dictator, fiscal policy, sunshine patriot.*

When it comes to politicians wanting to be elected, there is a rather amusing saying, 'you have to stand, to sit' meaning an aspirant to politics must put him or herself up for pre-selection and be the choice of the party; ie. to stand, before he or she can go to the polls and possibly be elected to sit in Parliament as a member.

A 'by-election' occurs when a Parliamentarian dies, retires or resigns, and a new person must be elected to take the seat; ie. to take up the position left vacant. If the position is held securely by a party, then it is called 'a safe seat', but if it could possibly be won by the opposition, it is called 'a marginal seat'. If the

position is in an affluent, conservative area then it is called 'a blue ribbon area/seat'. There are several other sayings associated with politics, for instance 'to cross the floor', which means that if a vote is taken about a bill in the Parliament, then a member of the other party votes with the opposition party 'to push the bill through'; ie. to ensure that the legislation being discussed becomes law. When a document is tabled in Parliament it means that it is presented for discussion, and then left on the table for other members to either act upon it by debate or to disregard it.

you have to stand, to sit; by-election, a marginal seat, a blue ribbon area/seat.

3.5.7 Entertainment

Entertainment covers a wide range of activities and therefore makes use of numerous expressions alluding to 'gambling', 'sport', and 'eating and drinking'.

3.5.7.1 Gambling

Some common gambling terms are 'to be on a winning streak' or 'to have a windfall' or 'to hit the jackpot' to signify that someone is lucky. If someone is extremely lucky English people may say: 'He/she has the luck of the Irish', and if a person wants to gamble or place a bet without giving it much thought, he/she will say 'I'll will take pot-luck' and 'to be down on one's luck' is to be in poor and unfortunate circumstances.

In describing the good luck of an Australian gambler, one would say 'he found his pot of gold at the end of the rainbow'. This alludes to the Western belief that great wealth lies at the end of a rainbow in the form of a pot of gold guarded by a leprechaun.

to be on a winning streak, to have a windfall, to hit the jackpot, He/she has the

luck of the Irish, I'll take pot-luck, to be down on one's luck, he found his pot of gold at the end of the rainbow, an Irish goblin.

3.5.7.2 Sport

Sayings such as 'Work hard and play hard', 'All work and no play makes Jack a dull boy' indicates the Australian attitude to sport and games, as Australians consider recreation and sport just as important as work. Perhaps, it is because of climatic conditions, and the fact that the country is a large island, surrounded by water that has given rise to various sports, particularly water sports. 'Bushwalking' is another popular Australian pastime or hobby.

Not all Australians participate in sport, however, most will watch sport on television, thus giving rise to the 'couch potato' or 'Norm', the archetypal Australian in the singlet, shorts and thongs, with a pot-belly and beer in his hand sitting on a couch watching sport.

Sport has always been a popular form of entertainment in Australia, and especially now since the country hosted the Olympics. Men and women all over the country are involved in 'keep-fit classes' such as aerobics and weight-training to enhance their bodies and to enjoy good health. One negative factor in this fitness craze is the use of 'performance-enhancing drugs' by some people, which has led to drug testing by authorities at all human competitive sporting events.

Cricket has given English the expression 'it's just not cricket' meaning 'it's not fair or acceptable' and 'you're are on a sticky wicket' means 'you are in unfortunate and disadvantageous situation' while 'you're on a good wicket!' means 'you are in an advantageous situation'. Australians often use the phrase 'a balls-up' to indicate that a situation is in complete disorder. This originated

from Australian Rules football when the ball is thrown up in the air for any player from either side to retrieve. If a person wants to emphasise that the discussion of a subject is crucial they will say 'the name of the game is' or 'that's the name of the game'. This phrase was made popular from the late 1960s onwards.

> *Work hard and play hard; All work and no play makes Jack a dull boy, Olympics countdown, keep-fit classes, performance-enhancing drugs, it's just not cricket, you're are on a sticky wicket, you're on a good wicket, a balls-up, the name of the game is, that's the name of the game.*

Tennis, boxing and racing terminology also figure in English sayings associated with finishing. 'Game, set and match' indicates that something is finished, 'to throw in the towel', 'a dead heat' means that there are equal winners in a race or game, 'to be in the home straight' means that you are near to finishing something, 'a photo finish' means that the distance between something or someone was so close that a photograph would have to determine the winner. 'To come from behind' means that the person suddenly comes to the fore unexpectedly, 'to win by a whisker' indicates a close finish and if someone 'throws in the towel' it means that they give up trying, as happens in boxing when a boxer cannot win. 'To play the field' is 'to keep oneself open to advantage from a number of sources' or is a popular way of saying that 'a person has many love-affairs before settling for one partner'. Examples below:

> *Game, set and match, to throw in the towel, to be in the home straight, a dead heat, a photo finish, to come from behind, to win by a whisker, to play the field.*

3.5.7.3 Eating and drinking

Australians were not exposed to a cosmopolitan way of life until the influx of migrants after World War II, when eating and drinking habits gradually changed.

Before this time it was customary to have 'the Sunday roast', which was a meal of roast meat and at least three vegetables. However, migrants brought with them different types of food and beverages such as pizza, kebabs, stir fries, coffee, and the Continental breakfast, which forever changed Australian cuisine.

Today, Australians enjoy the '(pub, club) culture'. In pubs and clubs one can have a counter lunch, a smorgasbord, a sit-down meal. There are poker machines and the TAB, films are shown, world-class entertainers feature in shows, meetings are held, and all-in-all, some Australian men or women over 18 years of age could, and sometimes do, spend most of their waking-life at these establishments.

The pub-culture lends itself to sayings such as 'it's your shout', meaning 'it's your turn to buy everyone a drink', or 'it's my shout' meaning 'I'll pay for the drinks for my friends'. A feature of drinking etiquette amongst Australian men is that you are not highly-regarded if you don't 'shout a mate a drink'. Words used for toasts such as 'Cheers' and 'Bottoms-up' indicate the English origins, particularly from sea-faring days. Examples below:

> *the Sunday roast, (pub, club) culture, a counter lunch, a smorgasbord, a sit-down meal, it's your shout, shout a mate a drink, Bottoms-up.*

English people tend to base their table manners on the way they present themselves at the table in sayings such as:

> *Don't speak with your mouth full*
> *Don't put your elbows on the table*
> *Don't reach across in front of people*
> *Don't leave the table till you're finished*
> *Don't burp after you have eaten.*

With regards to burping, the cultural difference is plainly seen, as burping in

Vietnamese society is considered as a sign of honour to the host, indicating that the person has had a wonderful meal. However, burping at the dinner table in Western society would be considered extremely ill-mannered and gauche. Also, children at the dinner table are sometimes told 'Do not speak until you're spoken to', although this is not applicable to most modern families today.

One recent innovation in restaurants has been to implement 'no-smoking zones' or 'smoke-free zones' which has been welcomed by many diners. Also in some clubs, the managers offer courtesy bus rides home to patrons who are over the drinking limit; ie. 0.05 blood alcohol level which has recently changed to 0.03 to try and stem the road toll. This stops them from 'drink-driving' and also prevents them being picked up by the 'booze bus' which is a roadside police initiative to stop people 'driving under the influence'. The driver is stopped and asked to blow into a device which measures his or her blood alcohol level. Examples below:

> *Do not speak until you're spoken to, no-smoking zones, smoke-free zones, drink-driving, booze bus, night-owl bus, driving under the influence.*

3.5.8 Appreciation

The concept of 'praise' and 'appreciation' has created a number of interesting word-combinations found within the domains of the Arts, sport and charity work.

3.5.8.1 The Arts

Let us examine the concept of praise particularly in relation to the theatre. For instance, Rudolph Nureyev, the world famous Russian ballet dancer, after one of his stunning performances in Paris, received '27 curtain calls'. The phrase 'curtain calls' is alien to Vietnamese theatre as the audience does not expect to

have to acknowledge the performer more than once at the finale. The phrase 'standing ovation' is also alien to Vietnamese theatre culture as well as to sport. The saying 'The show isn't over until the fat lady sings' takes its meaning from the 1970s modern American saying 'The opera isn't over till the fat lady sings' meaning that something has not ended until some important part of the whole has taken place [*Bloomsbury Dictionary of Phrase and Allusion,* 1992]. When a woman, the former Premier of Victoria, who was known for being a rather well-built lady, was in the news for allegedly plunging her State into financial trouble, her opposition used this saying to depict her and the situation at the time. In older times, the lead soprano in an opera was usually quite fat, for to be so, meant that she had a loud powerful voice. 'To sing' in modern colloquial language means to 'inform' or 'to tell on someone', so the significance of the use of the saying by her political enemies was very sarcastic and biting.

> *curtain calls, The show isn't over until the fat lady sings; The opera isn't over till the fat lady sings.*

Famous theatrical artists such as Rudolph Nureyev, a Russian ballet dancer, and Dame Joan Sutherland, an Australian opera singer, were always accustomed to public accolades. This was usually shown after their performances by the audience showing their appreciation in various ways, including throwing or presenting bouquets of flowers to them on stage:

> *(sing, heap) praises upon; (deeply, highly, sincerely) appreciated; receive (great, deep) praise; a good clap, curtain calls, standing ovations, resounding applause, shouting 'Encore'.*

The expression 'from the bottom of one's heart' comes to mind in relation to the theatre. To say 'from the bottom of my heart' shows extreme sincerity on the part of the speaker, but if the foreign language speaker gets the context wrong, the

meaning can be distorted and thus create a humorous bent to the saying. Take the case of Luciano Pavarotti, the world famous opera star, who when sending good wishes via satellite to Joan Sutherland, Australia's own famous opera star, stated 'I send you all good wishes from my bottom to your heart'. Of course he was paying great tribute to her but what he meant to say was 'I sent all good wishes from the bottom of my heart'. At any rate, this has gone down in history as one of the opera world's humorous and memorable anecdotes.

3.5.8.2 Sport

'Heaping praise upon people' applies to sportsmen and sportswomen, as was the case with Kieren Perkins when he finally 'came good' at the Atlanta Olympics in 1996 and won the Gold Medal in swimming. Before this, the people, to show their lack of appreciation for his perceived lack of effort used negative expressions:

> *(throw, hurl, yell) abuse; (trade, shout) insults; (scream, exchange) obscenities; boos and jeers.*

3.5.8.3 Charity work

Today, charity is still around for needy people; however, voluntary organisations such as Rotary, Lions and Apex Clubs find it very difficult to get people to be voluntary community helpers, and the churches have seen a downturn in their congregations. Many people echo the thought that 'charity begins at home', because hard economic times have made people less generous to their fellow beings. If someone in today's world lived up to all the above virtues stated, he or she would be labelled a 'wowser' which is an Australian colloquial acronymn of We Only Want Social Evils Remedied, a slogan invented by John Norton, an Australian journalist and politician in the late 1890s. Example below:

Charity begins at home.

3.6 Summary

English collocates were collected using a variety of corpora which were stored and later retrieved according to the required format. A large amount of collected material was illustrated and analysed from its structural, semantic and thematic perspective. Towards this end, different aspects of collocation in terms of grammatical configurations, connotative and denotative meanings and cultural groupings of the data were largely discussed.

The method adopted for the study of English collocational patterning in this chapter foreshadows a similar analytical approach, which will be the basis for the study of Vietnamese collocational patterning in the next chapter.