Being Modern Miao Women:

Gendered Ethnic Identity, Agency and the Commodification of Embroidery in Guizhou, China

Yinyin YE

This thesis is presented for the degree of Doctor of Philosophy

Department of Sociology

Faculty of Arts

Macquarie University, Sydney

January 2020

Abstract

This thesis examines the impact of China's modernisation on an ethnic minority's traditional cultural practice in rural China. The opening up of the national economy in China resulted in the expansion of tourism and the industrialisation of the textile industry, both of which were important means of earning foreign exchange. At the intersection of these major changes lies Miao embroidery, traditionally produced by women as a part of the ethnic cultural practice. In some villages in Guizhou Province, Miao embroidery has been heavily commodified as part of the state policy to develop ethnic tourism. On the one hand, various government policies, museums, art collectors and tourist aesthetics increasingly define what authentic Miao embroidery means, and which types of embroidery are fit to represent the 'Miao culture'. On the other hand, the introduction of machine-made embroideries enables the mass production of cheap embroideries to satisfy seemingly insatiable hunger of tourists and other consumers, while elevating officially endorsed forms of hand-crafted embroidery to an art form worthy of state protection and large price tags.

My discussion draws on an ethnographic study of Miao villages in Guizhou Province, where I engaged in participant observation, and interviewed Miao women and men, government officials, representatives of museums, tourist boards and other organisations. My analysis focuses on the impact of the large-scale economic change on ways in which Miao women interpret their ethnic cultural practice and family life, and shaped new aspirations. I argue that the commodification of Miao embroidery in China's modern industrial economy has paradoxically strengthened the traditional

ethnic cultural practice, while reconfiguring the gender relations in the household and the village, and the Miao ethnic identity at large. The arrival of the modern embroidery economy provided opportunities for some Miao women to claim new power and influence, while worsening certain forms of existing inequalities for others. The women's engagement in modern production and consumption of embroidery has transformed the Miao community as a whole, providing a new means to assert their cultural sovereignty in a complex, and at times contradictory, manner.

Table of Contents

Statement of Candidate

I certify that the work in this thesis, entitled *Being Modern Miao Women: Gendered Ethnic Identity, Agency and the Commodification of Embroidery in Guizhou, China*, has not been previously submitted for a degree nor has it been submitted as part of requirements for a degree to any other university or institution other than Macquarie University.

I also certify that this thesis is an original piece of research and it has been written by me. Any help and assistance I have received in my research work and the preparation of this thesis have been appropriately acknowledged.

Yinyin YE

Date: 01/01/2020

Acknowledgements

This thesis would not have come to the fruition without the continued help and support of many people who have continuously been there for me. I would like to take this opportunity to express my appreciation to them.

First and foremost, I am deeply grateful for the guidance of Dr. Kumiko Kawashima, who has been everything a student could ask for in a supervisor. Writing a PhD thesis is a marathon. I consider myself very lucky to have had Kumiko with me on this arduous journey. Throughout the years she has commented on each piece of writing, providing valuable insights and guidance to help me build sections, chapters and then the thesis. In my moments of self-doubt, anxiety and depression, her endless patience, constant support and ardent encouragement have inspired me to reembark on the writing journey. After navigating through many obstacles together we finally reach the end.

Furthermore, I would like to express my deepest gratitude to my co-supervisor Prof. Xinjian Xu. Without his enduring support and generous help, I wouldn't have gone this far: from Guizhou to Sichuan and now Macquarie University. His enthusiasm, subtle wit and extensive knowledge have inspired me from my very first entry into anthropological study. He has also generously shared his wisdom, experiences and insights as a senior Chinese academic with me, from which my own career will certainly benefit.

My heartfelt thanks go out to some of my closest friends who greatly supported me all the way through highs and lows: Junlan, Emma, Claire and Ariella. Thank you for being a warm light in these years, for believing in me, standing beside me, and being there for me when I needed you. All the moments I have shared with you illuminated my world. All good things in the future will become our new shining moments to share. I must also give thanks to Shaun, Roberta, Harry, both Penelopes and all the other department members in the Sociology Department. Thank you for making me feel welcomed from the first day I arrived at Macquarie, for your invaluable advice, practical help and chocolates along the way.

Last but certainly not the least, I am extremely grateful and indebted to my family for their unstinting support and great love. To my parents: thank you for always putting me first and responding to my every demand, at any and every hour, and truly, tirelessly supporting me. To my grandmother: you promised to give me a congratulatory red envelope to celebrate this moment. How I wish you were here to hand it to me. I miss you. To my husband Anakin: your effort, sacrifices and suffering in this endeavour were in no way less than mine, especially because you have been through your own challenges. Thank you for loving me, caring me and indulging me in the greatest moments and the darkest hours. I am so fortunate to be married to you.

List of Photos

List of Figures

List of Tables

Part 1

Chapter 1 Introduction: Miao Embroidery and Ethnic Tourism in Post-Socialist China

This thesis examines the impact of China's contemporary economic, sociopolitical and technological transformations on the traditional cultural embroidery practices of the Miao, an officially designated ethnic minority group situated largely in rural areas of Southwest China. The opening up of China's national economy since the late 1970s has resulted in the rapid expansion of domestic tourism and the development of the textile industry, both of which have become increasingly important means of accumulating financial capital for the Chinese state, Han business owners and ethnic minority communities alike. Miao embroidery is situated at the intersection of these major changes.

Since China's economic reforms were inaugurated in 1978, Deng Xiaoping's famous slogan "To get rich is glorious" has created a money-worshiping social environment across the nation (Nee, 2000). Many Miao people have replaced their farm work for wage labour in cities, and for entrepreneurial activities offered by the ethnic tourism market. Miao women in particular have been able to profit rapidly through selling embroidered Miao garments. Moreover, for the Miao, who were labelled by the Han ethnic majority as "backward" and "primitive" in the past (Diamond, 1995), 'doing business' serves as a concrete proof that they have made forward progress towards becoming modern through involvement in promoting regional economic development. Meanwhile, Miao embroidery is not only a market resource, but also an embodied ethnic cultural practice, which involves aspects such as recording historical stories;

strengthening clan ties; cultivating femininity; maintaining social order and expressing individual emotion and thoughts. In other words, producing embroidery is a central part of the work of constructing ethnic identity, particularly female gendered identity, for Miao women.

This thesis draws primarily on my original ethnographic research conducted within three Miao villages, Guizhou Province, Southwest China. This embroidery was previously the traditional activity of Miao women, but has become heavily commodified in some Miao villages, as part of the Chinese government's policy to develop ethnic tourism. On the one hand, non-Miao actors and bodies, such as government officials, museums, art collectors and tourists increasingly define Miao embroidery as an 'ethnic cultural resource', as well as a valuable commodity. On the other hand, Miao women themselves have actively engaged with the commodification process, contributing to the industrialisation of the ethnic craft, and transforming village life in the process. My analysis focuses on the impact of these large-scale economic changes on Miao women's interpretations of their ethnic cultural practices and family life, and how this is shaping new economic and social aspirations among these Miao communities.

In the following sections, I first review existing literature on ethnic crafts, which has shifted its focus from a semiotic approach to studying objects with symbolic meanings of ethnic culture, to their commodification for tourism and the broader market economy. Second, I discuss ethnic minorities and their conscious crafting of ethnic culture and identity in the face of burgeoning ethnic tourism, by using their ethnic crafts as a newly

powerful commodity. Third, I delve into issues of women's empowerment that this new tourism economy makes possible. I then examine the concept of agency, which forms the central theoretical framework of this thesis. Finally, I present my research questions and outline the chapter structure.

Ethnic Arts and Crafts: From 'Primitive Objects' to Commodities

Ethnic arts and crafts have been extensively studied in anthropology since the eighteenth century, and now have become a sub-field of anthropological studies on ethnic tourism. Here I begin with a brief historical introduction of anthropological studies on ethnic arts and crafts, followed by more recent studies focusing on the commodification of ethnic arts and crafts, especially the intersections of gender, crafts and tourism.

Earlier anthropological studies tended to categories ethnic arts and crafts as "primitive art", "tribal art", "non-Western art" and "art of small-scale societies" (Anderson, 1989; Price, 1989; Vogel, 1989; Clifford, 1988; Hughes, 1988; Rubin, 1984;)[1]. All of these terms referred to handmade objects crafted by "less civilised", "racially inferior" and "lower class" non-Western groups (Myers, 2006; Rushing, 1995; Layton, 1991). These studies focused on largely on the social functions of ethnic objects instead of their aesthetic values, and assessed the primitiveness of societies through the evaluation of the objects they produced (Esperanza, 2008).

[1] See Chapter 4 for a discussion on the terms "ethnic arts" and "crafts".

Such an analytic frame for ethnic artefacts has been criticised for its ethnocentrism based on the binary between modern and primitive. Robert Layton (1991), Shelly Errington (1994; 1998), and Fred Myers (2006) similarly argue that the term "primitive art" was a Western ideological construct to differentiate Western "high arts" and non-Western "low arts". The former represents culture, civilisation and 'us', while the latter nature, primitivism and 'other'. Earlier studies on "primitive art" largely regarded it as 'living fossils' of prehistorical cultures, and as a scale to measure relative levels of social advancement (Ellen, 2003). Only a small number of objects were designated as 'arts' to be exhibited in Western museums. For example, what Errington terms "authentic primitive art" refers to those "made by 'untouched' cultures for their own uses rather than for sale to 'outsiders' and that these objects are pure in their form and content, uncontaminated by Western influence" (1994, p. 201).

Miao embroidery has largely been studied in terms of its symbolic meanings through a semiotic approach, wherein "material culture becomes a form of 'text', something to be read and decoded" (Tilley, 2006, p. 7). This approach is illustrated by the common phrases both domestic and international researchers use in their descriptions of Miao embroidery: "writing with thread" (Harrell, 2009, p. 99), "Stories in Thread" (MacDowell, 1989, p. 7), "wearing history on costumes" (Wu, 1990, p. 132) and "embroidering history on the clothes" (Zhong, 2010, p. 3). As Miao languages do not have a writing system, Miao embroidery becomes a main method of documenting local history and culture. A number of studies have interpreted the respective meanings of various Miao embroidery patterns and motifs, attempting to enrich the documents of Miao historical stories and folk legends, and to deduce migration routes, totem worship, and the sub-ethnic differentiation of the Miao ethnic groups. (Qin, 2014; Long, 2011;

Hao & Yang, 2010; Yang, 1998; Yang, 1997; Yan, 1993).

Such semiotic studies of Miao embroidery typically focused on the role that this Miao craft plays in the construction of ethnic identity. As some have argued that there are no significant phenotypic differences (such as skin colour or facial features) among ethnic groups in Southwest China (Harrell, 2009; Diamond, 1995), scholars have suggested that Miao people used colours, patterns and needlework techniques as visual markers of cultural distinctiveness, and as a sign of ethnic identity in both premodern and modern China (Silberstein, 2015; Lee & Tapp, 2010; Corrigan, 2001; Jiang & Fang, 2000; Shao & Zeng, 1982). Chinese historical records that name Miao sub-groups according to the colour of their embroidered clothes have also encouraged studies on the function that clothing and embroidery styles serve to distinguish sub-groups of the Miao (Torii, 2009; Yang, 2009; X. F. Wu, 1990) (See Chapter 4 for a detailed explanation of Miao embroidery's function as a visual differentiation between Miao and other ethnic groups and sub-Miao groups). As with other anthropological studies of ethnic crafts, Miao embroidery was almost exclusively viewed by earlier scholars as objects produced for use within these ethnic minority communities themselves, with scant attention to their producers, their agency, and of craft production as a social process.

As noted above, the Han Chinese have long considered the Miao, along with other ethnic minorities, to be inferior (McCarthy, 2009; Mullaney, 2011; Hillman, 2003; Unger, 1997). and for the Han, Miao women's traditional attire is an iconic representation of Miao culture (Diamond, 1995). Wu (2013, p. 35) asserts that colourful

ethnic minority dresses "provid[eds] a clear visual distinction from the Han… [and] play an indispensable role in identifying ethnic minorities. The ethnic costume essentially became a uniform for Chinese ethnic minorities…". From this perspective, ethnic clothing such as Miao women's embroidered attire, functions both as a tool, and also as a symbol of the exoticisation of ethnic minorities.

The exoticisation of ethnic cultures by dominant ethnic groups and its impact on ethnic minorities' self-representation of their culture and ethnic identity occupy a prominent position in anthropological studies of ethnic tourism. In particular, scholars have examined the asymmetric power relations between dominant and minority ethnic cultures, and much attention has focused on the 'tourist gaze' (Berger, 2004, pp. 33-34), a term coined by John Urry (1990) to describe tourists' imagination and anticipation of other cultures. Ethnic tourism is understood as a type of tourism motivated by tourists' "search for exotic cultural experiences" (Yang, Wall & Smith, 2008, p. 752), and markets locations where they can "escape from the anomie of 'inauthentic' modernity and, in turn, a quest for authenticity" (Cohen, 2010, p. 6). Importantly, the consumption of ethnic crafts, especially those that use 'homely', 'natural' and 'earthy' designs, colours and materials, helps tourists imagine the pre-industrial era and thus satisfies their desire for nostalgia (Elliot, 2016). Such an exoticisation of ethnic minorities and their cultures have the effect of homogenising their diversity by reducing them to the singular, exotic Other.

Following the growing popularity of ethnic tourism, anthropologists have begun to study ethnic actors' motivations and agency in response to the exoticisation and the

stigmatisation of ethnic people by outsiders. For example, a recent study by Dimitrios Theodossopoulos (2012) involves the changing dress codes of the Emberá tribe in Panama. The Emberá abandoned traditional attire by wearing modern clothes since the 1980s, as a reaction against the "stereotypical Western expectations of Amerindian rainforest dwellers" as premodern and primitive (Theodossopoulos, 2012, p. 591). The development of regional ethnic tourism inspired the Emberá to being utilising their traditional dress not only as prominent symbols of their ethnicity within the tourism market, but also to attempt to control representations of their culture. Alexis Bunten (2008) studied the impact of tourism on the Stika Tribe of Alaska, in order to recognise and detail the process of self-exoticisation as 'the Other'. Economic benefits initially motivated them to perform their 'primitive life' and 'exotic femininity' for outside consumption. As they did so, however, they determined the content and means of their cultural presentations to balance the tourists' expectations and their own cultural integrity. That is, the self-presentation of the Stika Tribe was not a static evocation of the Western imagination of the 'Native people', but a reflexive adjustment to the growth of ethnic tourism. As Clifford reminds us, "the politics of identity and heritage are indeed constrained and empowered by today's more flexible forms of capitalist marketing, communication, and government" (2004, p. 9). These studies have challenged the predominated host-guest dichotomy which renders ethnic minorities merely 'subaltern', and allowed interpretations of their actions as adaptive strategies to maximise economic opportunities, assert their cultural authority, and to enhance their social, cultural and political visibility.

The definition of 'ethnicity' is complex, both theoretically and in relation to the Chinese context. The primordial approach to studying ethnicity was a dominant paradigm within

anthropology in the 1960s and 1970s (Eriksen, 2002). This approach is based on assumptions that ethnicity is ascribed at birth, and retains a relatively fixed and permanent nature throughout people's lives. According to this theory, ethnic identity is thus rooted in a primordial and fundamental attachment to a group, and the bonds between the individual and the group are unchangeable. Moreover, cultural characteristics which are used to distinguish groups are regarded as static, independent, and immune to social and political influences. (Aoki, 2002). However, an anthropological understanding of ethnic 'instrumentalism' view ethnicity as something that can be dynamic and changeable (Jones, 1997). At the heart of the instrumentalist approach is the socially constructed nature of ethnicity. Earlier adherents of instrumentalism emphasised collective actions and participation in the construction of ethnicity in the process of social interaction between groups, and political elites and leader's tactical use of ethnicity (Brass, 2000; Haas, 1993).

I most closely align myself with a growing number of critiques that have been directed at the supposed primordial-instrumental dichotomy of ethnicity. The Primordialist versus instrumentalist perspective has been fiercely debated over the years. Much of the debate has centered on an "either-or" model: only one approach is adequate for analysing the social and psychological dimensions of ethnicity and ethnic relations. That is, these two approaches have been treated as if they are mutually exclusive (Scott, 1990, p. 149). More recently, however, this dichotomy has been increasingly criticised by scholars. This is because it denies the possibility that members of an ethnic group may actively utilise their shared ethnicity for various interests, but may simultaneously have an understanding of ethnic identity based on emotional attachment and grounded in perceived shared blood ties and cultural experiences. For example, in their research

on the assimilation of ethnic Chinese in Thailand, Bun and Kiong (1993) found that the Chinese businessmen they studied used their ethnicity both for utilitarian and emotional purposes. On the one hand, they presented their Chinese ethnic identity to occupy exclusive economic niches, as the local society assumed that there was no conflict of interest between the Thai and the Chinese entrepreneurs. On the other hand, they worshipped their ancestors at home to reinforce their historical linkage with China, and maintain Chinese cultural values through celebrating Chinese rituals, speaking Cantonese and observing Chinese customs in their everyday lives. Similarly, in an analysis of ethnic boundaries among Sino-Vietnamese communities in Victoria, British Columbia, Woon (1985) showed that the Sino-Vietnamese utilised cultural characteristics, including language, ancestry and national origin, to gain instrumental help and practical advantages. Meanwhile, they retained less-robust primordial ties to one another, and dissociated themselves from outsiders who came from other regions or had different ethnic origins. Their maintenance of ethnic group boundaries in this context satisfied their desire for a historical sense of belonging to their ethnic group. These empirical studies demonstrate that ethnicity can be considered as primordial as well as situational/instrumental and socially constructed. In other words, ethnicity is complex and multidimensional (Bun & Kiong, 1993; Rosaldo, 1988; Woon, 1985; Benson, 1983; Nagata, 1981; Epstein, 1978; Esman, 1977).

In this thesis, I understand Miao women's production and presentation of their embroideries not just as objects to transmit traditional cultural knowledge and practice from the past to the present, but also as a process of adapting to and negotiating with diverse and at times conflicting expectations from tourists, art collectors, state officials and other actors, including Miao men and women themselves.

Chapter 3 will discuss China's ethnic classification project to explain the context-specific meaning of ethnicity in modern China. In Chapters 4 and 5, I will elaborate on the shifting and ongoing construction of gendered Miao ethnic identity through the practice of embroidery in the context of the development of the ethnic tourism economy. In doing so, I draw on existing anthropological studies on (self)exoticisation, ethnic identity and agency.

The Commodification of Ethnic Crafts

Recently, anthropological attention has turned to the commodification of ethnic arts and craft to examine the participation of ethnic minorities in the global economy (Roth, 2018; Lacher & Slocum, 2013; Esperanza, 2008; Sirika, 2008; Causey, 2003; Phillips & Steiner, 1999; Errington, 1998; Adams, 1997; Steiner, 1994; Swain, 1993; Graburn, 1979). It is evident that ethnic crafts that had previously circulated within local communities are gradually commercialised to suit new markets and outside consumers (Olwig & Gough 2013; Swanson & Timothy, 2012; Handique, 2010). Ethnic craft industries have gradually become a primary or supplementary income source for many ethnic people around the world (Kyejjusa, Gough & Kristensen, 2016; Harris, 2014; Stephen, 1991), and have also played a role in poverty alleviation through government policies and programs to promote them (Donaldson, 2007; Morais, Dong & Yang, 2007; Jackson, 2006; Rogerson, 2000).

Cultural and ethnic tourism is the main contributor to the commodification of ethnic crafts (Chutia & Sarma, 2016; Markwick, 2001; Garburn, 1984), and gives rise to markets for what Nelson Graburn called "tourist art" (1976; 1984). Engaging with

Garburn's concept, Cohen defined tourist arts as "ethnic art and craft products, produced for an 'external' audience, namely an audience that is typically unfamiliar with the culture and aesthetic criteria of the producer's society" (1993, p. 1). Such ethnic crafts may adapt the aesthetic features, skills, materials and even functions of ethnic crafts that have been adapted to meet tourists' expectations and tourism market needs, and therefore have little cultural relevance for ethnic communities (Hume, 2013; Swanson & Timothy, 2012; Cohen, 1993b; Jules-Rosette, 1986). For example, Baan Thawai villagers in Thailand started to carve famous pop art figures statues for tourists, instead of traditional Buddha statues. Cohen maintains notes that this design innovation is "unrelated to any continuously vital regional style" (2000, p. 234).

The production, distribution, and selling of ethnic objects for outside consumption amounts to the commodification of ethnic culture itself (Bunten, 2008; Cole, 2007; Macleod, 2006; Shepherd, 2002; Bankston & Henry 2000; Upton, 1996; Stephen, 1991; Graburn, 1979). Numerous forces impel this commodification. These include a growing tourist demand for exotic experience and items (Kim & Littrell, 2001; Graburn, 1984); the pursuit of handmade objects by those who reject mass production and large-scale industrial manufacturing (Littrell, Anderson & Brown, 1993; Cumming and Kaplan, 1991); and the promotion of cultural diversity in the "Age of Multiculturalism" (Halter, 2002, p. 65). As an ongoing process, the commodification of ethnic culture reflects, reinforces and complicates power relations among various social actors involved, such as ethnic minority communities, tourists, art collectors and governments (Yang, Wall & Smith, 2008; Bianchi, 2003). As a form of cultural production and reproduction, it leads to changes in not only ethnic culture itself, but also how ethnic communities understand and relate to their cultures, and to changes in relations between the dominant

and the minority cultures (Oakes, 2016; Heberer, 2007). Moreover, it provides ethnic minority communities opportunities to re-examine their culture and identity (Medina, 2003; De Azeredo, 2002; Picard, 1997). In sum, the commodification and consumption of ethnic cultures links ethnic communities with the global market economy and brings about complex local social, economic and cultural changes. Through the dynamic interaction among different social actors, self-presentations of ethnic and national identity, cultural productions, economic interests and political agendas all become reshaped continuously.

One of the key debates that has emerged concerning the commodification of ethnic culture is the shifting relationship between economic and cultural values attached to ethnic objects and traditions (Wilk, 2007; Storr, 2013; Snyder, Williams & Peterson, 2003; Shepherd, 2002; Mullin, 2001). This question has occupied a central place in anthropological literature, especially as it concerns the interrelation of issues such as tourism, ethnic culture, authenticity and agency. While some express doubt (J. Comaroff & J. L. Comaroff, 2009; Cole, 2007; Jackson, 1999), many researchers still maintain an analytic separation between products of culture and commodity objects. According to these scholars, culture is insightful, creative and intrinsic, while a commodity is superficial, reproducible and instrumental (Kirtsoglou and Theodossopoulos, 2004; Greenwood, 1989; Smith, 1988). As Harvey points out (2009, p. 93):

We distinguish cultural artefacts and events because we cannot bear to think of them as anything other than authentically different, existing on some higher plane of human

creativity and meaning than that located in the factories of mass production and consumption.

Driven by the belief that culture and commodity are intrinsically different, many previous studies have argued that the development of tourism degraded tradition, commoditised ethnicity, and disrupted the social structure of host communities. As noted by Stronza, "often entangled in discussions of commodification is the idea that people in host destinations will lose their cultural identity" (Stronza, 2001, p. 270). These scholars denounced what they understood as the degradation of authenticity through commercial production (Taylor, 2001). Sacred ceremonies degrade to money-driven performances in ethnic tourism settings (Ashworth, 2009); traditional ways of life are distorted under the tourist gaze (George, 2005; Selwyn,1996); and native people self-objectify themselves as the imaginary Other (Enloe, 2000; C. B. Cohen, 1995). In short, any cultural production and practice which aims to meet commercial interests would lead to the alteration and destruction of ethnic culture, as well as the loss of emotional bonds between individuals and their ethnic community. I follow Cohen in suggesting that earlier anthropological literature on ethnic tourism lacked a "processual, contextual, comparative and emic" (Cohen,1979, p. 31) approach without Western judgments, and therefore subscribed to the narratives of cultural degradation, inauthenticity, a loss of tradition and the victim of tourism development (Wang, 1999; Picard & Wood, 1997).

More recently, anthropologists have increasingly re-assessed the social-cultural impacts of ethnic tourism on host communities from an emic perspective. In particular,

researchers have come to pay more attention to the tensions between the agency of ethnic minorities and wider factors that limit or enact their "capability of doing things" (Giddens, 1984, p. 9) as workers in the ethnic tourism industry. The ethnic tourism industry and crafts business are thus viewed as powerful cultural arenas and processes that are built on the dynamic power relations between ethnic locals, tourists, governments and cultural entrepreneurs.

Recent studies on Miao embroidery align themselves with this research trend, and have investigated the commodification of Miao embroidery and its influence on the production and cultural practices of the craft. In the background is the steady growth of ethnic tourism industry in Guizhou province since the 1980s, which boosted the demand for and interest in Miao embroidery. It also made selling Miao embroidery a major source of cash income for Miao people (Feng, 2017; Oakes, 1999). Under these circumstances, some researchers became concerned with the potential loss of originality and authenticity represented in the styles, patterns and skills due to commercial development (Nie & Liu, 2011). Others considered the commodification of ethnic crafts as a catalyst for Miao people to reassess the value of their traditional embroidery, thus motivating them to protect and promote traditional embroidery knowledge (Zhang & Liu, 2013; Zhang, 2012; Long, 2012). Yet other kinds of research focused on the role of governments, enterprises and other social agents. For example, Tim Oakes focused on government policies put in place to encourage the Miao to seek profits from Miao embroidery trade (1999), while Li Zeng and Xianyang Zeng focused on the government-led activities focused on promoting traditional and non-commercial productions of Miao embroidery (L. Zeng & X. Zeng, 2017). Other scholars described the fashion industry's use of Miao embroidery in luxury clothing (Yang, 2018; Qian &

Wu, 2014;). Guitang Chen examined an artist's attempt to develop Miao embroidery into a creative industry aimed at the youth market (Chen, 2010). By focusing on the dynamic changes of Miao embroidery, these studies shone light on regional development, economic incentives and cultural reproduction that were fostered by the commodification of embroidery in remote Miao villages.

The commodification of Miao embroidery for ethnic tourism is embedded in the power dynamics and the tensions between central and local governments, given that China has adopted top-down state-led strategies to develop ethnic tourism (Qin, Wall & Liu, 2011; Wang & Wall, 2007). The central government plays a dominant role in strategic planning and policy-making, funds key tourism investments and entrepreneurship, and attempts to control social and cultural implications of ethnic tourism on citizens. Local authorities are responsible for the practical implementation of strategies and the management of regional tourism, which brings them much needed public resources and regional economic, political and cultural benefits (Wang & Xu, 2014; Airey & Chong, 2010; Su & Teo, 2008). The central and local governments collaborate, negotiate and at times clash with each other, the process of which reformulates their intricate relationship.

While ethnic tourism is often led by top-down approaches of state actors, ethnic minorities are increasingly viewed by scholars as agentic actors who assert their control over cultural resources within tourism industries. Tim Oakes (2016; 2006; 1999; 1998; 1997; 1995) has conducted several seminal studies on ethnic groups in Guizhou and their active participation in the transformation of their regional ethnic culture into

tourist commodities. He has examined the ways ethnic minorities use their traditional skills and promote their cultural distinctiveness, and has argued that ethnic people's strategic uses of their cultures and ethnic identities serve various purposes, from gaining economic benefits to asserting the ownership of their own cultural resources. Likewise, Cornet (2015) has found that the Dong villagers in Zhaoxing, Guizhou province viewed Han entrepreneur's entry into ethnic tourism markets as cultural appropriation. One key example of this is how Dong villagers expelled a Han-managed tourism company from their village. These studies have collectively examined how ethnic groups reject, negotiate, and adopt local ethnic tourism projects to reaffirm their desire for social and market integration on their own terms.

In the next section, I continue to discuss the agency that ethnic minorities exercise with regards to both the commodification of their crafts for ethnic tourism, and the (re)formation of their ethnic culture and identity.

Crafting Ethnic Culture and Identity via Commodified Crafts

Although earlier studies on ethnic tourism were mostly concerned with regional economic development and stressed the profit-driven nature of the ethnic craft industry catering to tourists (Hitchcock et al., 2010; Sinclair, 1998; Frederick, 1993), more recent studies have paid attention to ethnic minorities' enactment of agency, as revealed through their engagement in ethnic crafts commercial activities (Falak et al., 2016; Cave & Jolliffe, 2013; Stephen, 2005; Goodwin, 2002; Chibnik, 2003; Silverman, 1999). Theoretically, this perspective challenges the reductive dualisms of the "empowered tourist—disempowered host" (Bianchi, 2009, p. 484) and the alleged

“productivist bias” of tourism studies (Urry, 1990, p. 14). Ethnographically, the “social life” of ethnic objects (Appadurai, 1988, p. 13)—traveling from local producers, to middlemen, to global consumers—brings ethnic craftsmen and artisans into a complex and dynamic system wherein different social agents participate in the production, circulation and consumption of ethnic crafts with their own interests, motives, and goals (Cohen, 2000; Errington, 1998; Steiner, 1994). Moreover, the uniqueness of ethnic crafts skills and knowledge creates “an aura of exclusivity” and “a dynamic of community solidarity” (Gowlland, 2012, p. 361), which gives ethnic minority people a greater voice when entering tourism markets as producers and marketers. The two conditions together afford anthropologists an opportunity to examine the ways that ethnic craftsmen draw on their ‘cultural toolkits’ to interact with other social agents, and to pursue economic and noneconomic goals. This ranges from creating an income stream (Bonnin, 2018; Feng, 2007; Evans, 2000), to revitalising and protecting ethnic culture (Van, 2008; Ivory, 1999), strengthening ethnic identity (Cole, 2007; Costin, 1998), and liberating themselves from a subordinate position (Yang, 2011; Silverman, 1999).

A notable recent example is Eric Kline Silverman’s study of the tourist art in the Sepik River, Papua New Guinea (1999). There, local carvers altered traditional aesthetic styles and cultural themes of carving products to avoid desecrating “totemic spirit” (Silverman, 1999, p. 57). They also carved local slogans beneath the national emblem to present their ethnicity, and women weavers from different villages presented their Sepik ethnic identity by carving letters ‘PS’ on their baskets. In this way, they not only distinguished their aesthetic style from other regions’, but also represented a regional social identity. Sepik craftsmen’s commercial craft activity “conveys messages about

emergent notions of village, regional, and national ethnicity" (Silverman, 1999, p. 51).

Jennifer Esperanza's ethnography on Bali's ethnic arts industry demonstrated Balinese crafters' attempts to counter the dominant representations of Bali culture and people (2010). The Indonesian government viewed local craftsmen as "too colloquial, inherently and unchangingly bound to tradition, and at the periphery of the global economy" in catering for tourists' imaginations of Bali as a vanishing paradise which was untainted by globalisation (p. 20). However, Balinese craftsmen pursued a modern and cosmopolitan identity by means of showing their familiarity with global ethnic art markets, proficiency in English and professional business communication skills with Western tourists. Esperanza argued that the ethnic arts industry not only brought income-generating opportunities to the locals, but allowed them to demonstrate their involvement in the global economy and modern Balinese culture.

Van Haute's study provides another fascinating example of how ethnic minority producers of traditional arts took advantage of the tourist art industry to revitalise their culture (2008). African art, which had long been excluded from the Western art world, was fading away slowly. However, it has regained attention in global markets as the new commercial product of the postcolonial and exotic form of African tourism art. As a marketing strategy, African artists adhere to traditional aesthetics and skills in their production to meet Western tourists' desire for unchanged 'tribal art'. More importantly, it could be regarded as African artisans' conscious attempts to keep African art alive, in order to avoid assimilation or cultural extinction, as well as being an expression of their cultural pride. In other words, African artists successfully repositioned tourism art

from “the sphere of the postcolonial exotic” to an “oppositional system of postcolonial resistance” (Van, 2008, p. 26, p. 34).

In all of the above examples, ethnic minority and indigenous groups are agentive participants in the global ethnic arts and crafts industry. They actively alter their traditional practices in order to “make traditions work with the new epoch” (Mosquera, 2002, p. 269). They market ‘primitive’ aesthetics and ancestral designs to meet consumers’ expectations of authentic and exotic ethnic crafts. They are not passively ‘gazed’ upon by people who are unfamiliar with their culture, or view their cultural production as “a repetition of practices and customs of the past” (Makang, 1997, p. 336). Instead, they take advantage of this gaze to enhance their visibility more widely and establish modern cultural representations in their own terms. Ethnic arts and crafts have even become a “readily recognizable, economically relevant way” (Girshick, 2008, p. 229) for ethnic groups to forge and present idealised versions of themselves.

However, the study of tourist art from the ethnic communities’ perspectives also reminds us that power inequalities among different levels of governments, local ethnic minority communities, tourists and ethnic craft entrepreneurs should not be taken for granted. There is no denying that the commodification of ethnic arts and crafts is a “commercial exploitation of culture” (Yang & Wall, 2014, p. 319). For example, in the interactions with tourists and intermediaries, ethnic minorities are assumed as providers of the cultural ‘Otherness’ for tourist consumption. Furthermore, local artisans modify their ethnic objects to cater to tourists’ tastes and desires, and are constantly exploited by middlemen (Shah & Patel, 2017). However, global ethnic crafts business also

empowers ethnic community members. Marketing their unique cultural resources provides them with greater motivation, capacity and opportunity to preserve and revive their cultures, improve their living standards, strengthen ethnic identity and alter historic stigmas (Xie, 2010; Yang & Wall, 2009; Cole, 2006a). In many respects, they have therefore "put tourism to work for them rather than working for tourism" (Sofield, 2003, p. 327), while also still working for tourism and for tourists in other respects, as outlined above. This territory is therefore very complex, fraught and full of tensions, and it is these very complexities that are unpacked and examined in detail throughout this thesis. Importantly, the indispensability of ethnic minority and indigenous communities as cultural bearers and craft producers in the ethnic tourism industry also enables them to negotiate and resist other social agents in determining the authenticity, availability, aesthetics and prices of ethnic crafts in the market (Wherry, 2006; Hoerig, 2003; Chang, 1999). Their agentive practices could be viewed as attempts to reclaim their traditional art from middlemen, tourists and other social agents involved in the industry's complex network of production, sale and consumption, and to reconfigure the power relations in the regional and global marketplace of commercial crafts.

Commercial Ethnic Craft Business and Women's Empowerment

A small but growing research field focusing specifically on ethnic women's commercial craft practices has emerged, given that the ethnic craft sector is becoming a pillar industry in many developing countries (Moswete & Lacey, 2015; Bonnin, 2011; Hassanin, 2009; Manwa, 2008; Sirika, 2008; Feng, 2007; Acharya & Lund, 2002; Jongeward, 2001; Swain, 1993). The rise of ethnic tourism has provided employment and entrepreneurial opportunities for ethnic minority women to produce and sell their

own crafts to tourists. Since substantive start-up capital and professional business training are not required at early stages of trading, ethnic minority women with few resources can easily set up a small craft business. By means of their traditional skills and ethnic identity, women have become dominant producers and marketers in commercial ethnic craft industries in diverse locations (Kyeijusa, Gough & & Kristensen, 2016). As Ferguson (2010), Forstner (2013) and Le Mare (2012) argue, a main thrust of ethnic minority women's commercial craft activities is to challenge traditional gender roles and gender relations through those particular skills, which had long been the means to promote traditional gender norms. In this sense, selling ethnic crafts should not be understood as a pure economic activity, but also a social process through which gender norms and relations are presented and reshaped (Ahl, 2006).

A number of ethnographic studies have focused on the gendered impact of women's commercial crafts activities. For example, as the case of Emberá women of Eastern Panama and their woven baskets tourism businesses demonstrate (Colin, 2013), female weavers asserted more autonomous and stronger senses of selves by fulfilling the 'breadwinner' role. This resisted the "patriarchal ideology of 'maternal altruism'" (Colin, 2013, p. 505) through making women's contributions to the household more material and visibly tangible. In another example, women selling embroidered linens outside their communities in Purépecha, Mexico, challenged the dichotomy of public/private with male/female, thus redefining local understandings of femininity (Nelson, 2006). Bakas (2014) examined multifaceted and complex changes in the gender division of labour in the female-led craft industry in rural Greece. As the market drove women to be "more rational and individualistic" (Bakas, 2014, p. 287), they openly neglected household duties and recruited their husbands into their businesses.

All of these above studies have recognised that women's economic empowerment triggers social and political change and empowerment, and further challenges "views of a patriarchal society as being rigid and difficult to change" (Movono & Dahles, 2017, p. 10).

However, many scholars also argue that ethnic women's engagement in income-generating craft activities does not necessarily liberate them from traditional gender norms. For instance, in Zaoptec, Mexico, although women were the producers of rugs, men dominated the distribution and sale of rug products, leading them to control the business finances, including earnings (Stephen, 1993). More ironically, Mayan craftswomen (Cone, 1995), Mexican weavers (Cohen, 2001) and Miao women in Hunan Province, China (Feng, 2017), were encouraged to enter the ethnic craft sector by their communities, as they could still fulfil their child-rearing and household duties while producing crafts at home. In these cases, women's craft activities are assumed not to challenge traditional gender norms (Le Mare, 2012), and could be even be considered as additional unpaid labour on top of domestic and child rearing duties. These cases illustrate that women's economic gain through marketing their crafts do not always empower them to resist prevailing gender norms and gender power relations.

Still, ethnic women's engagement in tourism craft production often affects traditional patriarchal social systems, even if it does not significant challenge them. It is, perhaps, more productive to view gender relations as multi-faceted (Ferguson, 2011; Kabeer, 2005), understanding them as dynamics that play-out not only at the household and village levels, but also at state and global levels, where uneven power relations exist

between women/men, ethnic minority/dominant groups, local residents/tourists and craft producers/middlemen (Diekmann & Smith, 2015). For example, ethnic women assert their agency in controlling craft commodities produced and sold in the markets (Esperanza, 2014), and reshape ethnic identity in the face of exoticisation and feminisation of the ethnic Other in tourist zones (Li, 2003).

Conceptual Understandings of Agency

The structure-agency debate emerged in anthropology in the 1980s, in the context of critiquing structuralism's neglect of the role of individuals' thoughts and actions in processes of social construction (Dowding, 2008). Specifically, discussions on agency are intertwined with the development of practice theory.[2] As feminist anthropologist Sherry Ortner explains: "modern practice theory seeks to explain the relationship(s) that obtain between human action, on the one hand, and some global entity which we may call 'the system' on the other" (Ortner, 1984, p. 148). In examining the ways in which culture is created, maintained and changed, practice theory aims to liberate social agents from the constrictions of previous dominant theories, but still within the context of their bounds. It examines human actions without ignoring the larger structures. In other words, practice theory recognises that social orders and cultural forms could both produce and be reproduced by individual thoughts and actions.

[2] The emergence of practice theory was a response to a dominant theory paradigm shift in western anthropology between the 1960s and the1980s. That is, from symbolic anthropology, structural Marxism and political economy to practice theory. Please see Ortner (1984). Theory in Anthropology since the Sixties. Nugent (2007). Some reflections on anthropological structural Marxism.

Leaning in and overlapping with practice theory, anthropological discussions on human agency revolve around human agents' articulations of social structures that both enable and constrain their thoughts and actions. In the following section, I discuss agency in the context of freewill and power, both of which are helpful to capture how Miao women enact their agency.

Agency and Free Will

It has been argued that agency should not be thought of as synonymous with free will. This critique cautions against the overemphasis on heroic individuals' roles in history, which usually implies that individual free will determines historical changes (Ahearn, 2001a; J. Comaroff & J. L. Comaroff, 1992). By way of illustration, Cooper (1994), Scott (1999) and Pieters (2000) call attention to the fact that in colonial and post-colonial studies, the agency of the colonised is explained as the full autonomy on social and political practices, which blurs the distinction between free will and individual agency. Ahearn (2001a) and Ortner (2001) argue that equating individual agency with free will ignores the impact of habitus. The concept of habitus can be understood as "a system of durable, transposable dispositions which function as the generative basis of structured, objectively unified, social practices" (Rapport & Overing, 2000, p. 2). The concept of "toolkit" (Swidler, 1986) is helpful to explain the role of embodied habitus in shaping individual's intentions and actions. Individuals take values, habits, and skills from cultural toolkits to draw on plans, purse desires, meet needs and solve problems. As the toolkit itself is culturally presupposed, all individuals' intensions and practices are thus bounded in a specific context. In sum, the discussion on agency and free will highlights that human action is limited by the given cultural values and social orders, which are (largely) internalised and inconspicuous.

Agency and Power

A growing number of anthropological studies have begun to question the understanding that agency is a synonym of resistance to power (Hay, 2010; Ortner, 2001; Goddard, 2000; Ahearn, 1999; Abu-Lughod, 1990). This theme is especially prominent in subaltern studies and feminist studies, where women's resistance towards patriarchy, subaltern's resistance to hegemonic social formations, or working-class resistance to capitalist state power are main forms of asserting agency (Mahmood, 2006; Goddard, 2000). As Abu-Lughod points out (1990), there is a tendency to romanticise resistance in anthropological studies, wherein actors' resistance to power is the leading demonstration of the "resilience and creativity of the human spirit in its refusal to be dominated" (p. 24). Based on an empirical study on Ali Bedouin, a community in Egypt's Western Desert, and women's resistance to the gender system, Abu-Lughod argues that some resistance movements do not aim to gain power, but are "a culturally shaped and historically specific response" (p. 52). Similarly, drawing on an ethnography of women who accept money for sex in Papua New Guinea, Wardlow indicates that some movements turn into resistance activities after the fact (2004). This reminds us of the dynamic and fluid characteristics of resistance, which prompts us to avoid rigidly defining agency as resistance to power.

Ortner also contributes to the designation of agency as only resistance, and considers power from a different perspective. She presents two types of agency: agency of power and agency of intention. Ortner defines the former as the "ability to act on their own behalf, influence other people and events, and maintain some kind of control in their own lives" (2001, p. 78). The latter is conceptualised as "agency of culturally constituted intentions" in which "people seek to accomplish things within a framework of their own terms, their own categories of value" (Ortner 2001, p. 80). According to

her, the main difference between the two types of agency is the goals of individuals' actions: gaining power on others or realising personal desires. She refers to an ethnographical example from the Comaroff's work *The Management of Marriage in a Tsawana Chiefdom* (1981) to illustrate the difference (2001, p. 81). In Tshwane society, women did all farming work, and this division of labour not only implies women's inferior and subordinate status, but also constructs women's identities as daughters or wives. Under this specific cultural context, Tsawana women strongly resisted missionaries' assignment of farming work to men. Their resistance should not be understood as a compliance with existing gender relations, but as a means to maintain their social identities. It needs to be emphasised that the two types of agency are not necessarily mutually exclusive. Instead, social actors may simultaneously or alternatively display two types of agencies at different discursive moments. The rethinking of the relationship between agentive acts and power expands forms of agency—as resistance of domination, as pursuit of personal purposes, and even as complicity with power (Lauran, 1999). The key to realising various forms of agency is to pay greater attention to how people in specific ethnographic contexts locate, conceptualise and measure agency.

Local Agency

Anthropologists in the last couple of decades have further reformulated agency through viewing it as a culture-based and changeable concept, rather than a Western concept with an assumption that liberalism and freedom are the innate desires and ultimate meanings of all human actions. In her book *The Politics of Piety: The Islamic Revival and the Feminist Subject* (2004), Saba Mahmood challenges the secular feminist misappreciation of Muslim women's agency. Based on her findings from fieldwork on

Muslim women's piety movements in Cairo, she argues that the goal of the movement was not functional, such as to subvert social norms and male domination. Rather, central to the movement was Muslim women's self-training as pious, virtuous and ethical subjects. Mahmood calls this form of agency "moral agency" (2004, p. 5), in which the agent does not desire for political, but religious freedom. In another study, Webb Keane argues (2007) that a prevalent western understanding of agency as self-determination is radically different from its meaning in Indonesian cosmology and religious practices. He suggests that anthropologists find 'local agency' in different cultural contexts, instead of adopting agency as an inherently western concept (Keane, 2003; 2007). In addition, Ahearn (2001b) documented social change surrounding marriage practices in a Nepali village, which was directly affected by the emergence of love-letter writing. This practice evoked individuals' senses of agency, especially among young people who started to realise that they have the ability to direct their lives, rather than just submit themselves to fate or karma. Rather than presupposing and using a universal understanding of agency, Ahearn set out to find out how the term agency was conceptualised in the village in locally and culturally specific ways. These examples together call for studies that pay close attention to specific ethnographic contexts in order to understand human agency in a variety of locations.

In this thesis, I engage with the question of how Miao women enact their agency as individuals, wives, mothers, entrepreneurs, producers, consumers and promoters of embroideries in the rapidly changing context of China's economic development. I use Laura Ahearn's general definition of agency, which is that "agency refers to the sociocultural mediated capacity to act" (Ahearn 2001a, p. 112). The rise of ethnic tourism, technological advances and the introduction of the capitalist economy in

villages have transformed ethnic practices. In particular, Miao women's embroidery is a critical means of enacting and asserting their agency, which in turn mutually shapes gender norms and relations, economic development and Miao ethnic identity.

Miao Women, Embroidery and Agency

While the literature on Miao embroidery is vast, much of it focuses on the social roles and variations of Miao embroidery itself. Little attention has been paid to Miao women as the producers, users, inheritors and consumers of Miao embroidery. I situate my thesis among anthropological theoretical and ethnographic studies on agency. Drawing on my fieldwork, I pay particular attention to the tension between Miao individuals and the wider social, cultural and other factors. Miao women are socialised to conform to certain gender roles through their embodied traditional Miao embroidery practices. Despite this, they exercise agency in making decisions such as which types of Miao embroidery to present to tourists, how to negotiate the traditional gender divisions of labour at home and in the village, and how to use their new commercial activities to redefine Miao ethnic identity. In other words, the concept of agency helps to explain how a modern Miao identity is created and reaffirmed through Miao women's embodiment with the commercial development of Miao embroidery. Moreover, the dynamic nature of authenticity brings our attention to the power relations in the commodification of Miao embroidery, which illuminates a complex picture of the interactions between local actors and outsiders.

Some scholars have explored the role of embroidery as a tool to socialise Miao women into gender roles and give differentiated social statuses. For example, Zhaohua He

(2012) shows that learning and producing embroidery serves an important role in cultivating obedience and diligence among Miao women. Xiao Zhang (2009) presents a similar argument based on her oral history study of women in Xijiang Miao Village, Guizhou. Embroidering and weaving reflects and reinforces the gender division of labour, and this embodied learning of gendered cultural standards and behavioural norms is about learning the ideal Miao femininity. The quality and quantity of embroidered clothes owned by a Miao woman serve as material proof of her primary family's socioeconomic status, a fact that is corroborated by official household data collected during 1956-1963 by the Guizhou Provincial Institute of Ethnology (Guizhou Provincial Institute of Ethnology, 2009).

Prior to the 2000s there was only a very limited body of literature specific to the interrelation between Miao women's agency and the wider social and cultural systems in which they are embedded. Instead, past studies tended to depict Miao women as a unified and singular whole, who willingly submitted themselves to patriarchal power. For example, the Guizhou Institute of Ethnic Minorities edited a book titled *Studies on Guizhou Ethnic Women*, which is a collection of local scholars' studies on ethnic women of Guizhou. In the introduction of this book, Weng (1995), an influential local anthropologist, depicts Miao women as follows:

> In Miao families, Miao women work longer and harder than men. Apart from heavy farm work, they undertake all house chores, spin and weave, raise poultry, and bring up children. They contributed most but gained least. During the period of food shortage, they save food for husband, elder and children. The have many

> obligations but less rights. … They have no right to assign, inherit and dispose family property. They cannot take away kids after their husbands die. They are deprived from the right to basic education, and most of them are illiterate. Their activity spaces are limited to family, villages and nearby areas. They are enclosed in this small area and silently undertake heavy burdens of production and reproduction their whole life: from girls to wives to mothers-in law (p. 5).

Similar depictions also appear in other researchers' works wherein Miao women were portrayed "obedient and passive" (Zhang, 1997, p. 29), and "obey traditional gender roles without resistance" (He, 1998, p. 22). These male-centred narratives from elite perspectives rendered Miao women "the voiceless subaltern" (Ko, 2007, p. 7), incapable of developing the desire or ability to change the unequal gender power relations.

Moreover, some researchers called for Miao women to fight for their rights and interests by illustrating the improvement of Miao women's social, economic and political status over time. However, their appeals are more of a political slogan to cater for the Communist Party of China's declaration of liberating Chinese women as part of the process of modernisation (Zhou, 2003). The characteristic of previous studies on Miao women's agency is similar with what Dorothy Ko acutely illustrated in her study on the historical narratives of Chinese foot binding: although women were performers of foot binding, their agency, subjectivity and physicality were inflected in narratives of male and intellectual elites.

Since the 2000s, a growing number of anthropologists have examined the interaction between Miao women's individual and collective agency on the one hand, and the structural factors and social norms that they are implicated in on the other hand. They do this primarily by drawing on ethnographic investigations of Miao women's courtship and marriage, education, and leisure activities. For instance, Mei-ling Chien's (2009) ethnographic study analyses the complex and contradictory relationships between flirtation and cross-cousin marriage in a Miao village in Eastern Guizhou, and further reveals the tensions between Miao women's individual desires for romantic love and the collective social ideals of marriage. As another key example, Wong (2003) investigates Miao women's experiences in organising a women's community centre, in order to challenge traditional thoughts on women's education and pregnancy in a Miao village in Leishan County, Guizhou. The author shows how Miao women attempted to articulate their needs and achieve self-empowerment by confronting oppressive patriarchal ideologies.

I align my thesis with a growing number of studies on Miao women's enactment of agency in the context of modernity. Xinxin Li (2016) examines how Miao women's desires for modernity are satisfied through buying modern electronic devices such as Televisions and mobile phones, and how they build their ideal modern village life through the choice of a marriage partner and new ways of raising children and managing family relationships. Chen Wang (2012) explores Miao women's experiences as migrant workers in urban China and the impact of this work migration on traditional gender norms in a Miao village of Southwestern Guizhou. Several recent studies have contributed to debates regarding the impact of ethnic tourism on Miao women in Guizhou, Yunnan and Hunan provinces. These include Feng's (2017) study on the

gendered divisions of labour in Fenghuang Miao village, and Lang's (2008) study of collaborative and competitive relationships among former Miao housewives who become tourism hosts. This thesis continues the work of these scholars by examining women's engagement in the changing practices of Miao embroidery, as it is fertile ground to examine issues of ethnic identity and individual agency in capitalist modernity. Embroidery is a vital and daily cultural practice of Miao women, and can be understood as an intermediary between Miao women's agency, and social and cultural factors that enable and also constrain their exercise of agency. Such factors include traditional gendered social norms, kinship ties, ethnic relations, and capitalist economic imperatives. This thesis contributes to the literature of these themes and issues by situating embroidery as an ethnic cultural practice in the context of post-socialist China, where the modern capitalist regime has dramatically transformed lives in ethnic villages.

There is some tension associated with the meaning of modern identity in relation to ethnic minority women in China. On the one hand, Miao women's engagement in the commercial production of ethnic crafts can empower them by providing an opportunity to increase their earning capacity, enhance their decision-making role in the household, and reinforce their ethnic identity to assert cultural autonomy. On the other hand, in the context of the developmentalist discourse of modernity in China, to be modern means to become 'civilised', and to be civilized is to adopt the orientation of the Han ethnic majority. The Chinese concept of Han modernity is oppositional to the idea of backwardness, femininity and exoticism associated with ethnic minorities (Gladney 1994; Diamond 1988), and the Han modernity is promoted as universal. It is in this context that ethnic tourism has developed to bring an opportunity for ethnic minority villages to dispense with their status as "living fossils" (Oakes 1993:54), and to join the

national narrative of progress and economic development.

At the same time, there is a curious paradox associated with Chinese ethnic tourism: it is about creating the "modern traditional" space (Walsh 2001). Domestic and foreign tourists visit 'peripheral' ethnic regions to witness and experience 'traditional ways of life', and this establishes and confirms their own modern identity as opposed to ethnic minorities as their Other (Walsh & Swain, 2004; Blum, 2001). Miao embroidery is highly popular sourvenir among visiting tourists because of what they see as its 'exotic' and 'premodern' aesthetics, and its ability to be a reminder of their experience of rural and ethnic China. But as my thesis will show in detail, the production, promotion and consumption of Miao embroidery as a tourist commodity is a thoroughly modern phenomenon. It is through the performance of their 'premodern' identity that Miao women cultivate their newly modern identity as entrepreneurs, mothers and custodians of embroidery as an important ethnic cultural practice.

Research Questions

Miao women's engagement in the modern production and consumption of embroidery raise questions of the impact of the commodification of ethnic crafts on ethnic minority women and their village community at large—economically, socially, politically and culturally. On a more specific level, I pose the following four main research questions:

1. What roles have the emerging Miao embroidery industry and related cultural practices played in Miao communities that were previously dominated by

agrarian-based economies?

2. What are the main factors that have stimulated the emergence and development of the commercial Miao embroidery industry, in the context of China's economic reforms, ethnic tourism, and ethnic policies?

3. How has Miao women's engagement in the production and commercialisation of embroidery contributed to existing social inequalities, or reconfigured the gender relations in the household, the village and the broader Miao ethnic identity at large?

4. How have the Miao diversified their understandings, aspirations and practices of Miao culture in an attempt to assert their cultural sovereignty, given the diversity of actors and institutions involved in Miao embroidery marketplaces?

By asking these questions, I investigate rural ethnic minority villagers' pursuits of economic gains, social status and cultural autonomy through their engagement in China's modernisation. In this process, ethnic agents' desires, intentions and actions are shaped by large social-economic forces, and vice versa. This thesis addresses the tension between individual agency and structure through which ethnic culture is commercialised, reproduced and revitalised. I argue that the commodification of Miao embroidery in China's contemporary market economy has paradoxically strengthened the traditional ethnic cultural practice, while simultaneously reconfiguring the gender relations within both the household and the village, thus transforming Miao ethnic identity at large. The development of the contemporary embroidery economy has provided opportunities for some Miao women to claim new forms of power and

influence, while solidifying or even intensifying certain forms of existing inequalities for others. The engagement of Miao women in the contemporary production, commodification and consumption of embroidery has transformed these Miao communities as a whole, providing a new means for them to assert their cultural sovereignty in complex, and at times contradictory manners.

Chapter Outline

This thesis is comprised of three parts. Part 1 includes the first three chapters. This introductory chapter has situated the research topic in conceptual and theoretical concerns in relevant literature. Chapter 2 outlines the historical background to the phenomenon investigated in my field sites, in particular, social, political and economic factors that have impacted Miao embroidery since the 1970s. The opening-up of the national economy had directly led to the commercial development of ethnic crafts, which in turn provided Miao women with new economic opportunities. Chapter 3 explains the research methods used, which are participant observation, interviews and desktop research.

Part 2 examines the commodification of Miao embroidery. Chapter 4 explains the traditional functions of embroidery for the Miao villages. Long before the arrival of the modern capitalist economy, embroidery had served important cultural and social functions in Miao villages. The practices of embroidery were already a powerful source of ethnic identity, as well as a means to pass down ethnic traditions. Embroidery as an embodied practice was both something that provided Miao women with a sense of pride,

and disciplined them in a highly gendered manner. Chapter 5 traces the recent history of how ethnic embroidery has become a commodity to be produced and sold for profit since the 1980s. Various actors—from art collectors and government officials, to domestic and foreign tourists—all contributed to creating a new craft-based economy driven by the rise of ethnic tourism. Chapter 6 follows up on the developments since the 2000s, which are distinct from the past in terms of the political background and the patterns of embroidery production and trade. The new systems of production and trade consolidated some privileged women's economic advantages while producing some benefits to less privileged women.

Part 3 delves into the impacts of the commodification of embroidery on power relations and identities in the Miao village where I conducted my fieldwork. Chapter 7 focuses on changing gender roles as a result of women's entry into embroidery business and the cash economy. My research revealed that husbands and wives need to negotiate the gendered divisions of labour much more than before, producing both new economic opportunities and tensions and anxieties in the households. Chapter 8 turns attention to how this new economic model has changed the Miao's perspectives towards what they view as authentic ethnic embroidery. The new production methods and consumption of embroidery by the Miao themselves, and tourists' demands for cheaper souvenir products have all contributed to the thriving modern, machine-made embroideries. Miao women have responded to this change by developing a more fluid notion of authentic Miao embroidery, all the while claiming the right to define an authentic ethnic identity. Chapter 9 analyses the impact of the commodification of embroidery on Miao ethnic identity. The Miao had previously devalued their own ethnic practice, including embroidery, in comparison to the 'modern' Han majority culture. However, the new

economic value attached to embroidery and its successful promotion have made it possible for Miao women to cultivate and assert modern subjectivities as ethnic minority women. The concluding chapter summarises the main findings in order to highlight the contributions of this thesis to the relevant bodies of literature, as well as the overall importance of researching women as producers of ethnic identity and culture. Finally, I propose some fruitful research directions for the future of this field.

Chapter 2 Research Methods

This thesis is based on ethnographic fieldwork conducted in three Miao villages located in Guizhou province, Southwest China. The overall purpose of my fieldwork was to gain an understanding of how Miao embroidery is embodied in Miao women's construction and expression of their ethnic and gender identity. Furthermore, I wished to examine how (or if) these embodiments have been impacted or transformed through the commodification of their embroidery, in the context of local economic development and ethnic cultural heritage protection. The chapter below is dedicated to describing my field sites, introducing my research participants, and outlining my methodologies in detail.

Fieldwork

Field Sites

My fieldwork was primarily conducted between August 2012 and September 2013 in the following three Miao regions in the rural Southeastern area of Guizhou Province: Butterfly Village, Red Village and Silver Village (all village names are pseudonyms). I took an additional return visit between May and June 2016. Butterfly Village was my primary field site, while the other two villages were selected as additional sites of comparison (see Chapter 5). Map 1 illustrates a satellite photo showing the locations of my field sites within the province of Guizhou.

During my stay, I conducted interviews with Miao women and men, government officials, merchants, collectors and tourists. I also conducted participant observation at ethnic arts markets, museum exhibitions and other Miao embroidery-related events and activities, such as festivals, weddings, and craft competitions. Moreover, I undertook an apprenticeship as a method to further access Miao women's embroidery culture and practice.

Butterfly Village

Butterfly Village is located in the North of Taijiang County, in the East part of Qiandongnan Miao and Dong Autonomous Prefecture, in the Southeast portion of Guizhou Province. The administrative capital of Qiandongnan Miao and Dong Autonomous Prefecture is Kaili, a county-level city about thirty minutes by bus from Butterfly Village. The capital of Guizhou province is Guiyang, a middle-level city about three hours by bus from Butterfly Village. In 2012 the total population of Butterfly Village was 751, consisting of 98.8% Miao people and 1.2% Han people. The administrative regions of Butterfly are 11.38km^2, and the cultivated area is 1.0625 km^2. [3] Butterfly Village provides modern infrastructure to its residents, ranging from tap water, electricity, gas, the sewage drain system, to television, telephone, cell-phone and broadband reception and networks. Butterfly Village is five minutes' walk from the village centre, which is host to small shops, a post office, a small hospital, and a middle school.

[3] The data was provided by the village government of Butterfly Village.

I chose Butterfly Village as my main field site from among the approximately 400 Miao villages in Qiandongnan Miao and Dong Autonomous Prefecture. Several factors make Butterfly an ideal place to examine the commodification of Miao embroidery. First, Miao embroidery thrives in this village, and its learning, teaching, production, and use remain important to local women's lives to this day. This contrasts with other Miao areas where embroidery skills are in danger of dying out, with fewer and fewer Miao women producing embroidery compared to previous generations. In these villages, Miao embroidery has mostly become a rather static historical object to be passed down to the next generation or kept in museums, rather than an embodied, living practice. As Agnes Heller points out (1984), social reproduction is made possible by the collection of individual's repeated daily activities. Choosing Butterfly Village informed my understanding of Miao embroidery as a vivid and embodied practice among Miao women, and how the process of modernisation has changed the way it is understood and practiced by the Miao themselves.

Second, the Miao embroidery of Butterfly Village has become a significant ethnic cultural resource of Guizhou province. The provincial government vigorously supports and invests in the ethnic tourism industry, for which the development of a Butterfly 'brand' of Miao embroidery is key. Butterfly Village is dubbed "the representative of Miao embroidery" by the government, and has become an iconic symbol of Guizhou's ethnic culture. The rainbow-coloured style traditional to the Butterfly Village embroidery is the most prominent of all Miao embroidery in the country, thus attracting thousands of domestic and international tourists to the village each year. In the anthropological research of the commodification of ethnic crafts, the development of ethnic tourism is a key impetus. Therefore, Butterfly Village is an appropriate field site

to examine the transformation of a traditional ethnic craft into a tourist commodity under the government's impetus and the rapid development of the ethnic tourism industry in China.

Third, the Miao embroidery of Butterfly Village has gained considerable attention from collectors worldwide since the 1980s, and has become a fixture in the global art markets. This niche market of exquisite and rare handmade embroidery for art collectors has developed in parallel with a mass market of cheap and machine-manufactured embroidery items for everyday tourists. Both rare hand-made embroidery and mass-produced versions are sold within Butterfly Village. This polarisation of Miao embroidery markets in Butterfly Village makes it an important site to examine the reconstruction of Miao embroidery's cultural authenticity under the transformation of technology.

Fourth, the number of Miao women engaged in Miao embroidery business in Butterfly Village is higher than in other Miao regions. Miao women in Butterfly Village are increasingly entering the embroidery economy as not only producers but also marketers and entrepreneurs. Stories abound about how an ordinary Butterfly Village Miao woman made a fortune through selling Miao embroidery, or was elected as a village head. These new business practices have brought changes to the economic and social structures of the Butterfly community, subsequently reconfiguring gender roles among the Miao. These features make Butterfly Village an ideal field site to explore how ethnic female entrepreneurs actively draw on collective cultural resources to improve their earning capacity, which in turn affects local social and cultural norms, as well as the

economic organisation of the villages. Butterfly Village therefore presents a dynamic site to investigate the interrelationship between women's agency in improving their own material life and social status, the commodification of ethnic craft and changing gender relations.

As mentioned above, in addition to the main field site of Butterfly Village, I conducted further fieldwork in two other Guizhou villages, Red and Silver. These villages provide some illuminating contrastive case studies to help understand the commodification of Miao embroidery in Butterfly Village, by demonstrating the diversity among Miao villages and their embroidery practice in present-day China.

Red Village

Red Village is located in the Southwest of Jianhe County, in the central part of Qiandongnan Miao and Dong Autonomous Prefecture, Southeastern Guizhou Province. The total population of Red Village is 1,333 (as of 2012), and consisted at that time entirely of residents who identify as Miao. The administrative regions of W village are 11.9 km^2, and the cultivated area is 0.466 km^2. Red Village is a self-sufficient village, where the major industry is fish and fruit farming. The per capita income in 2012 was 1,970 *yuan* (AU$394).[4]

The nearest city is the newly built Gedong downtown, about 38km away from Red

[4] The data is provided by the village government of Red Village.

Village. It takes approximately four and a half hours from Red Village to the Provincial Capital Guiyang. The village has tap water, unstable electricity, television and telephone reception, and a primary school. Other infrastructure is under development. However, since the 1990s, most young and middle-aged Miao people in Red Village have been migrating to Chinese cities to earn money by engaging in factory and construction work, and other manual labour. Few people are willing to return to the village, due to the greater economic and social opportunities available in urban China. Consequently, a large percentage of residents remaining behind in the villages are elderly, who are often dependent on the remittances from family members working as migrants in the cities.

As explained in Chapter 1, Red Village provides an interesting point of comparison with Butterfly Village, because of its limited Miao embroidery industry, despite the fact that Miao women still practice embroidery daily, and that the flow of tourists is sufficient to create a thriving ethnic tourism industry. As my findings explain, insufficient attention and investment by government officials and art collectors contributed significantly to this difference.

Silver Village

Silver Village is located in the Southwest of Jianhe County, in the central part of Qiandongnan Miao and Dong Autonomous Prefecture, in the southeast portion of Guizhou Province. The total population of Silver Village is 538 (as of 2012) and consisted at that time entirely of residents who identify as Miao. The administrative regions of Silver Village are 10.4 km^2, and the cultivated area is 0.752 km^2. Silver

Village is a self-sufficient village, where the major industry is farming and raising poultry. The per capita income in 2012 was 1250 *yuan* (AU$250).[5]

As one of the most remote villages in Guizhou, Silver Village is inaccessible by modern transport. The only way to enter Silver Village is to have a 3-hour trip by ferry from a neighbouring township Nanzhai, followed by a 3-hour mountain trek. Silver Village lacks clean water, gas and a sewerage system. Electricity is only available one day a week and the only reliable electronic communication is the landline telephone. There are no shops, no school and hospital in Silver Village. The isolated location and lack of infrastructure makes it extremely difficult to promote the village as a tourist destination.

Similar to the other two villages, embroidery is still widely practiced by Miao women in Silver Village. The Chinese government places particular value on the 'tin' style embroidery techniques used by these women, and has invested efforts to promote the embroidery of Silver Village through ethnic tourism, akin to Butterfly Village. However, these efforts and the subsequent commodification of Miao embroidery have so far failed to lift Silver Village out of poverty. As my analysis will later reveal, major causes of this failure include the geographically isolated and thus inaccessible nature of this village, and the time-consuming tin embroidery method, which is unsuitable for rapid production.

[5] The data is provided by the village government of Silver Village.

Participant Observation

Participant observation has become a foundational anthropological method of data collection since Bronislaw Malinowski introduced it in the 1920s (1922). One hallmark of participant observation is that researchers should place themselves in local environment, trying to understand various cultural practices and local knowledge from an emic perspective. In order to do this, researchers participate in activities to closely observe how things are organised and developed, which they use to inform their perceptions and understandings of the social and economic systems, religion, history, traditions and cultural paradigms of the local society (Bernard, 2017). Participant observation provides an access to the "backstage culture" by means of situating researchers themselves into local contexts (De Munck, 1998, p. 43). This in turn enables anthropologists to transform themselves from "observing participants" to "participant observers" (Woodward, 2008, pp. 536-568).

I conducted participant observation at government offices, museums, tourist shops and crafts markets in the three villages, Kaili, Guiyang and Beijing. These visits helped me to gain an understanding of the role played by different agents in the commodification of Miao embroidery as producers, marketers, distributors, and consumers. In particular, I paid attention to the use of the provincial development plan for investing in the promotion of Miao embroidery, how collectors and crafts markets valued and traded embroidery, the ways in which these values were reproduced by craft enterprises and displayed in exhibitions.

The publication of *Writing Culture: The Poetics and Politics of Ethnography*, a highly

influential book edited by James Clifford and George Marcus in 1986, started vigorous debates about ethnographic writing (James, Hockey & Dawson, 1997), ethnographic authority (Enguix, 2014), politics of representation (Conklin et al., 2013; Bourgois, 2006), reflexivity (Salzman, 2002) and objectivity (Mosse, 2006) in the context of an increasingly globalised, post-colonial and fragmented world. One central issue has been the positionality of researcher/ethnographer during fieldwork (Ergun & Erdemir, 2010; Merriam, et al., 2001; Sherif, 2001; Narayan, 1993; Headland, Pike & Harris, 1990). Early discussions assumed that the ethnographer was predominantly either an insider or outsider, and analysed the costs and benefits of being or not being a member of the population studied (Hayfield & Huxley, 2015; Cunliffe & Karunanayake, 2013). Since 1990, a growing body of theoretical and empirical studies have argued the dichotomy of insider/outsider or native/foreign was overly simplistic, and explored the complexity and fluidity of researcher's position when conducting research within and across cultures (Dwyer & Buckle, 2009; Brayboy & Deyhle, 2000). These studies responded to "a greater consciousness of situational identities and to the perception of relative power" (Angrosino, 2005, p.734), and revealed that the boundaries between the two status is ambiguous at best. Factors such as the researcher's notion of self, rapport and the friendship between the researcher and the researched, as well as dynamic power relationships create a "between space" where ethnographers are partially insider and outsider at the same time (Sherif, 2001; Lloyd, Ennis, & Alkinson, 1994).

In my own project, I experienced a particular mix of insider and outsider status in relation to Miao people. As a Chinese woman who grew up in Guizhou province, I had prior knowledge about the regional ethnic tourism development, ethnic relations and the geographical location of Miao villages. Moreover, my uncle was an official in the

Guizhou Provincial Museum. Being responsible for the collection and exhibition of Miao silver decorations, he has become acquainted with many Miao people in the past decades. By means of his social resources, I had a chance to meet various actors engaged in the commodification of Miao embroidery, and was treated by go-betweens with some familiarity when I first arrived in Miao villages. My gender also gave access to women-only groups and an opportunity to become an apprentice to learn the female specific art of Miao embroidery under the guidance of a female. In other words, my reginal root, family connection and gender gave me some insider status, which in turn helped me to gain social acceptance and ties in the field from the beginning.

Being an educated urban Han researcher underscored my outsider status. I had very limited knowledge of Miao oral languages, social norms, lifestyles and taboos because I was socialised in a different community. Apart from Miao villages, I also conducted participant observation in markets and museums, and interviewed officials, entrepreneurs and tourists. While I was an obvious outsider in terms of my ethnic, cultural and geographical origin, my outsider status made it seem natural that I asked many questions about Miao culture, which often prompted the research participants to provide elaborate explanations to educate me, a novice apprentice and a curious visitor. In addition, my Han and English language skills allowed me to help translate between Miao women and both domestic and foreign tourists. Through this, I could witness and observe how Miao women operated and expanded their business. Most notably, my status as a simultaneous insider/outsider constantly shifted during interactions with Miao women, especially when I became a Miao embroidery apprentice in Butterfly Village.

One contribution of the insider/outsider debate is to acknowledge the subjectivity in ethnographic research and to admit "the limits of one's purview from these positions" (Narayan, 1993, p. 679). Every researcher is positioned in a specific way to the people they interact with during fieldwork, and should be aware of how their positions shape the relationship with the research participants, as well as data collection and analysis in a negotiated and ongoing process. Such a reflexive approach helped shape this project.

Below are the key sites where I conducted participant observation. My observations from the combination of these sites revealed how Miao embroidery as a cultural product emerges from the various interests of diverse actors, both private and public, institutions and individuals.

Key Government Organisations

Guizhou Intangible Cultural Heritage Protection Centre

This Centre is affiliated with the Guizhou Provincial Department of Culture, an official organisation that oversees the Cultural Industry Development Plan, along with administrating fine arts, architecture, music, drama, dance, and other 'cultural' practices of Guizhou Province. The Centre is responsible for the implementation of intangible cultural heritage protection. One of its central roles includes selecting successors of Miao embroidery who would officially represent the tradition by acting as skilled masters to train younger generations of Miao women. Through participant observation, I gained an understanding of the details of the processes of protecting Miao embroidery as cultural heritage at the province level, especially regarding how the provincial government agency turned the traditional apprenticeship practice, which was

on a voluntary basis, into an enforced relationship for a select number of Miao women. As I will detail in a later chapter, the selection of such 'representative successors' has caused competition between town/village governments as well as individual Miao women. First, for a town/village, the possession of successors of a town/village indicates national and provincial governments' recognition of its Miao embroidery resources, which is important for local's tourism-oriented revenue generation. Second, for individual Miao women, being a successor is an honour as well as a vehicle for expanding business and social networks. Therefore, the selection of Miao embroidery successor is not only an official method to protect traditional ethnic skills, but also brings about the exercise of new forms of power for both local governments and individual Miao women.

The Guizhou Commerce Department and Guizhou Small and Medium Enterprise Bureau (GSMEB)

In addition to the cultural protection of Miao embroidery, the government also influences the commercial embroidery industry. As an important cultural resource, Miao embroidery is integrated into the blueprint of the economic development of Guizhou province by the local government.

The Guizhou Commerce Department and its subordinate organisation, GSMEB, are in charge of specific matters to prompt the production and consumption of commercial Miao embroidery. The Guizhou Commerce Deparment endeavours to attract external investment, especially foreign investment from wealthy economies. GSMEB especially targets small to medium Miao embroidery businesses by directly providing funding

support and entrepreneurial consulting services for Miao people who wish to run an embroidery business and establish a trade platform. Its overall aim is to build a business ecosystem in the province for Miao embroidery products.

My times spent conducting participant observation at these organisations enriched my understanding of three key aspects related to my topic. Firstly, I established an understanding of the current status of the global market for Miao embroidery. I also obtained information regarding the process of providing official financial support to increase embroidery business activities by Miao entrepreneurs. Moreover, through their networks, I could identify successful Miao embroidery merchants to contact.

Guizhou Provincial Museum

Since 1980, the Guizhou Provincial Museum in the provincial capital Guiyang has been purchasing collectible embroidery directly from Miao women, as well as intermediaries. It has also held numerous exhibitions of Miao embroidery. By studying its collections and past exhibitions, I was able to understand the provincial government's preferential treatment and promotion of certain visual aesthetics. The museum was also a valuable source of photographic records of Miao embroidery. With the museum's permission, I took photographs of these collections ranging from the late Qing Dynasty (1840-1912) to the present, and use these images to demonstrate how industrialisation and tourism has affected the material, style and skill involved in the making of Miao embroidery.

I also visited the store adjacent to the Museum, operated by an influential private firm,

Qianyibao Co., Ltd. The store was established in 2005 when ethnic tourism was flourishing in Guizhou province. Most visitors mistakenly believe it is a souvenir store operated by the museum. The firm is significant, because it has become one of the largest cultural tourism product companies in Guizhou, selling items such as silver accessories, batik textile and embroidered pieces. My participant observation at the store helped me to gain an insight into how the public-private collaboration divides the labour of promoting Miao embroidery as key to Guizhou's ethnic tourism. In particular, I gained an understanding of the role such private firms play in not only distributing embroidered items as cultural artefacts, but also actively engaging in their production process. The firm turns Miao embroidery into 'tourism products' by deciding on embroidery patterns, 'outsourcing' the design creation to Miao women, and ordering mass production at factories, before selling them to museum visitors at the store owned by the firm. Some Miao women worked at the firm as embroiders and sales staff. During my time at the firm, I was able to form positive connections with some of these women, and to approach them to conduct interviews. These interviews were extremely valuable, informing my understanding of how some Miao women are now involved in promoting a mass manufactured version of their embroidery culture as part of Guizhou's ethnic tourism. I also interacted with store visitors to understand their perceptions of embroidery as visual symbols of the Miao culture.

Crafts Markets

Crafts markets are important sites in the overall processes and networks of the commodification of Miao embroidery, and one end point of the commodity circuit. It provides a platform for Miao women to enter the market economy as producers and marketers of their embroidery. It is also the place where Miao producers come into

direct contact with consumers of their art and craft. I conducted participant observation at two craft markets, one local market in Guizhou province, and one national market in Beijing.

The Kaili ethnic textile market is located, as the name suggests, within Kaili, which is the capital city of Qiandongnan Miao and Dong Autonomous Prefecture. It sells handmade batik fabric, embroidery, and ethnic clothes made by Miao, Dong and Buyi ethnic groups. Most vendors are Miao and Dong people living in nearby villages. Buyers consist of ethnic crafts collectors, middlemen and tourists. The market opens every day from 10am to 6pm with around thirty stalls. On weekends, the stalls increase to sixty. Each vender occupies a space in the yard where they display their items. The quality of textiles varies, and the trading volume fluctuates. Most Butterfly Miao women who have stalls at this market view it as a temporary job rather than a full-time occupation.

Panjiayuan Antique Market is the biggest antiques, arts and crafts market in China. It is located in Southeast Beijing, covering an area of 48,500 square meters. There are over 5000 shops selling items such jade ware, antique currency, textiles, ceramics, and abundant and varied Miao embroidery. Since the early 1990s, Miao women from Guizhou province have been selling embroideries there, both their own productions and those they collected from nearby Miao villages. In 2012, there were around 40 Miao women from Guizhou selling handmade and machine-made Miao embroidery as professional vendors at the market.

My attendance and participant observation at these two markets allowed me to closely observe the communication and bargaining that occurs between sellers and buyers. At the local market, most customers are middlemen and collectors who have rigorous demands on the time taken to produce embroidery pieces, the particular skills, patterns and materials used, as these elements directly determine the value of Miao embroidery as an ethnic craft. Accordingly, sellers profit greatly from the quality of products. At the national market, nearly half the customers are domestic and foreign tourists. They come to the market to experience Chinese culture, including ethnic cultures. These tourists tend to pay significant attention to the cultural uniqueness of Miao embroidery as distinct from 'Han' Chinese textiles. Therefore, how to present their products as authentic and original by stressing their own ethnic identity has become an important strategy for Miao sellers. In other words, the sellers explicitly promote their ethnicity to gain economic advantages. Through observing the difference between the two markets, I gained insight into Miao women's instrumental use of ethnicity within cultural markets, which reflects their agency on drawing on not only material culture, but also their cultural identity to create business opportunities.

During participant observation, I also conducted interviews with several government officials, domestic and foreign collectors, tourists and business people. The interview questions asked about their work and activities relating to Miao embroidery, price and commodity surveys of Miao embroidery in markets, and the implementation of relevant government policies.

Unstructured Interviews with Miao People

Interviews with Miao Women

I conducted interviews with Miao women in each field site. I recruited them during my apprenticeship, and through networks I made during participant observation. In Butterfly Village, I completed 50 interviews with Miao women. In Red Village, I completed 15 interviews with Miao women. In Silver Village, I completed 20 interviews with Miao women. The age range of my interviewees ranges from 16-82. In terms of education level, 20% percent of the interviewees have not received formal education; 60% have received primary education; 20% have received secondary education. In terms of their embroidery practice, 30% of these Miao women have engaged in sorm form of Miao embroidery business. 20% were operating Miao embroidery businesses during my fieldwork. The remainder (especially in the two additional field sites), like the older generations, still follow traditional ways of making embroidery for themselves and daughters and do not engage in the selling of their embroidery.

In regard to my methodologies and ethics, I made notes during interviews and discussions, and made audio recordings where permission was given. In terms of data management and analysis, I typed up all interview notes and partial transcriptions where recordings were made in order to accurately represent the expression of interviewees. All translations of these interviews have been done by me. I then identified key themes for analysis which allowed me to synthesise and analyse these interviews and discussions. All individual names are pseudonyms.

I deliberately avoided taking the structured interview as my main data collection

method. In my fieldwork I tried to lessen and diffuse the power inequalities and alienation inherent in researcher-interlocutor relations, and I believe that structured interviews can strengthen these dynamics. This is primarily related to the directness of structured interviews, which can be perceived by interviewees as an overly abrupt or intrusive inquiry into participants' privacy, and be a disturbance of their daily routines (Jennings, 2004). I witnessed many times how Miao women were bothered by other researchers and journalists' interviews during my own fieldwork. Once, a young Miao woman was sitting embroidering her wedding outfit in the shade. A researcher accompanied by a local official spotted and approached the woman and immediately began interviewing her without first acquiring her consent. As an apprentice of Miao embroidery, I had enough experience to appreciate the deep concentration required by this practice, and any distraction could cause an incorrect stitch. The journalist asked one question after another in the Han language, which greatly disturbed the young Miao woman's embroidering process. Predictably but no less tragically, she failed to notice a skipped stitch until sometime after her interactions with this pair, which unfortunately destroyed the entire embroidery piece. Afterwards, the young Miao woman expressed her helplessness: "They are powerful people I could not afford to upset." During such an encounter characterised by power inequality, the interview becomes a direct interrogation rather than a communication with the participants (Jennings, 2004).

I was also conscious of not provoking Miao women's self-protective behaviour. Many of my interlocutors were Miao business women who have dealt with the media and various levels of government officials for years. When facing questions raised by researchers and journalists, these women knew how to build an image of "a minority female entrepreneur who spares no effort to promote the development of Miao culture".

While this is still the women's chosen ways of self-representation, I also believe that these 'performances' for media and government entities consciously mimic the mainstream discourses on the commodification of ethnic cultures. This result, I argue, in a simplification of the multiple motivations these women have of producing and selling Miao embroidery, and how they value Miao embroidery from subjective perspectives. By avoiding the rigidity of the structured interview method, my aim was to interact in more natural and fluid ways with Miao women, to engage with them as active individuals who draw on their ethnicity in the interaction between Miao traditional values and the development of ethnic tourism in Guizhou province.

Interviews with Miao Men

I also conducted interviews with Miao men in all three villages, as they are also active agents in both traditional and commercial Miao embroidery activities. I interviewed some of my female interviewees' husbands and sons. Most interview questions related to their viewpoints on the typical 'women's job' and their experiences collecting and selling Miao embroidery. I conducted interviews with ten men in Butterfly Village, four in Red Village, and two in Silver Village.

Traditionally, Miao men contributed to the maintenance of gender norms and the division of labour by supporting women while they embroidered. At present, they frequently participate in or jointly share the workload of their wife or mother's Miao embroidery business. Some also seek to take complete control of women's businesses to assert or maintain their gendered power over these women.

Document Analysis

I further analysed various key documents to supplement the information I collected through participant observation and interviews. I gathered hard copies of the national, provincial and prefectural government policies and regulations of protecting and promoting ethnic cultural resources (including Miao embroidery)[6]; the criteria for selecting successors of Miao embroidery from the Guizhou Provincial Department of Culture; the industrial standard of handmade/machine-made Miao embroidery, the report of the domestic and foreign investment of Miao embroidery from the Guizhou Commerce Department; tourist brochures of Guizhou compiled by the Guizhou Tourism Bureau; the annual sales report (including cost and benefit) of Miao embroidery souvenirs of *Qianyibao Co., Ltd*, the largest cultural tourism product company in Guizhou. I also gathered media coverage of Miao embroidery-related activities and events. As Atkinson and Coffey articulate, documents are "social facts which are produced, shared and used in socially organised ways" (1997, p. 47). The abovementioned documents reflect the implementation of various strategies to protect and promote Miao embroidery by government and non-government organisations. A thorough analysis of these documents helped me to understand the intersections between political goals, economic incentives and cultural reproduction embodied in the production and circulation of Miao embroidery in Guizhou province.

Apprenticeship as a Fieldwork Method

In addition to the methods outlined above, I also engaged in an apprenticeship as a

[6] The data is incomplete since some documents are confidential.

fieldwork method. In anthropology, apprenticeships as a research methodology have been of increasing interest and concern since the late 1980s. The seminal work *Apprenticeship: From Theory to Method and Back Again* (Coy, 1989) systematically theorised apprenticeships as a fieldwork method, and elaborated apprenticeship's role on social, economic and cultural aspects, with illuminative examples from the works of eight anthropologists. According to Coy's definition, apprenticeships are a method of training novices to acquire specific skills by practicians. Most trainings are conducted in practical environments (such as a workshop or factory), where practicians (masters) pass on their skills to novices (apprentices), in exchange for their (often free or lowly paid) labour for an agreed period. As a situated learning scenario, apprenticeships widely exist in craft production across the globe. For scholars studying crafts, performances and sports, apprenticeship-based fieldwork has become a popular approach to research (recent examples include Dalidowicz, 2012; Gowlland, 2012; Crossley, 2004).

Anthropologists-as-apprentices try to understand how learning, knowing and practice interact in situated bodies and minds (Marchand, 2011). They explore the social and economic reasons that bring to the change of the current apprenticeship system (Gowlland, 2012). They perceive the embodiment of gender in skilled training and the division of labour (Naji, 2012). In other words, these anthropologists are not only learners of skills, but are also "cultural apprentices" (Dilley, 2001, p. 867). As an apprentice, they gain access to local communities, learning skills and culture simultaneously. That is, the apprentice status opens doors for anthropologists to "learn a skill, learn about a skill and learn about learning" (Goody, 1989, p. 254).

I sought and obtained the agreement of an experienced Miao embroiderer to act as my master and teach me the basics of her craft. I found my master, Shuou, via personal introduction by my uncle's acquaintance named Defa, a male silversmith in Butterfly Village. Shuou and I soon became familiar with each other. As I am the same age as her daughter, Shuou affectionately called me "little girl", and I called her "big sister" in return. During my time in Butterfly Village, I lived in her home for approximately half a year, learning Miao embroidery, hearing her stories, and participating in various activities with her. On average, she spent 6-8 hours per week with me, but I was also asked to practice by myself whenever possible. I compensated her for the board and lodging expenses incurred, around 1000 *yuan* (AU$200) per month, and regularly helped with cooking and other house chores. During the peak tourism season, I volunteered to act as a translator between her and Han tourists in order to help her embroidery business.

There were a number of advantages that my apprentice status brought to my research. First, the apprenticeship provided a legitimate identity and reason for me to enter the local society, and to conduct participant observation effectively. Several researchers have noted the limitations of participant observation (Lacono, 2009; Clifford & Marcus, 1986; Jackson, 1983). One common limitation is the local people's hesitation to have an outsider who aims to actively participate in local social events. In such a situation, researchers are often seen as invading local social structures and daily life, and therefore reduced to a passively "non-participating observer" in practice (Downey, 2010, p. 4). In my case, I was fortunate that the Miao embroidery community in Butterfly Village was quite open and welcoming of my presence. Every skilled Miao woman could be another's master, which means that Miao embroidery skills are a kind of shared

knowledge, rather than an exclusive knowledge controlled by a small number of individuals. The openness of this knowledge-sharing system also means that almost anyone can become an apprentice. By having Shuou as my master, my presence in the village was legitimised, and accepted widely as a result. My experience echoes that of Monica Dalidowicz (2012), whose approach to researching Kathak Dance in North Indian was also apprenticeship-based. Benefiting from this identity, local people who followed the same master took her as one of their own, and even tried to establish kin-like relationships with her (Dalidowicz, 2012).

Second, my social network in Butterfly Village was rapidly built and expanded due to my status as an apprentice. Within a few weeks, most Miao women in nearby villages knew of me, and that I was being taught by Shuou. Although increasing numbers of outside researchers, journalists and businesspeople have visited the village in recent years, the villagers have yet to meet another non-Miao person who has sought to learn embroidery from them. Driven by curiosity, many Miao women came to Shuou's home to meet me, and greeted me warmly. Some of them even invited me to their home to show me their embroidery skills and productions. Apprenticeship-based fieldwork provided an opportunity for me to change my status in the eyes of the villagers. I was able to shift my identity from an irrelevant outsider to an apprentice who should obey a set of social roles. This shift helped me to acquire an "emically real role", to further and better realise active participation in the local community (Coy, 1989, p. 119).

Third, my status as a novice apprentice helped keep in check the power balance between the researcher and the researched. Anthropology began to more seriously reflect on the

ethnocentrism of ethnographers, which was a particular reaction and response to the publication of Bronislaw Malinowski's diary in 1967. This diary revealed his negative and self-superior feelings towards Trobriander people in New Guinea, who were his long-term fieldwork informants. This diary sparked critical anthropological reflections on how to avoid overly subjective and culturally superior perspectives of anthropologists towards their informants, in preference for more relativist, self-reflexive approaches (Clifford & Marcus, 1986).

By nature of being an apprentice, researchers become novices who are situated in a 'peripheric position' in the society. For example, Greg Downey was told by his teacher that he was "just like every other student" (2010, p. 2). This "peripheric position" does not only indicates skill level, but also social and economic status. Eugene Cooper (1989) recounts his experience of being an apprentice in a carved wood furniture factory in Hong Kong and how he was ordered to do menial chores for the first few months of his apprenticeship. For local people who rely on a specific industry (such as woodcarving in the above second example), a new apprentice is rarely capable of creating enough economic value for the industry. Also, a new apprentice lacks virtuosity to gain higher social status and powerful social relationships. Situated in such peripheric positions when acting as apprentices, the sense of psychological and/or cultural superiority that anthropologists can experience in the field can be offset or alleviated. In my own experience, one of the most common phrases my master said to me was: "Even a 10-year-old Miao girl could finish this embroidery." Other Miao women could not help laughing when they saw me spending 10 minutes to put the thread into the needle. Making a fool of oneself is also a process of equalising power relations between the researcher and the participants: I am neither a sophisticated learner nor a well-educated

researcher, but a clumsy apprentice. This identity that I came to embody in the field reduced the distance between the Miao women and myself, and helped to create a relaxed atmosphere in my communication with them and the other villagers.

My status as a novice apprentice who is literate in the Han language provided a unique opportunity for me to reciprocate their time, effort and generosity in training me. They sometimes came to Shuou's home and asked me to help them write Mandarin Chinese descriptions for their Miao embroidery commodities. Some of them invited me to sell Miao embroidery with them, as I could freely communicate with Han and foreign English-speaking tourists. For example, tourists were interested in the symbolic meaning of Miao embroidery patterns, however, most Miao women could not adequately articulate the detailed stories behind the embroidery patterns, which often disappointed tourists. Miao women turned to me in these moments, as I could elaborate on the historical stories and legends in Mandarin. Through such occasions of mutual support, I could not only make small contributions to the Miao women's businesses, but a greater level of trust and respect also developed between these women and myself as a novice of some use to them.

Furthermore, due to my engagement in the local practice of embroidery apprenticeship, I was granted a chance to develop a deeper understanding of the cultural context and market circulation of Miao embroidery. Their treatment of me like a novice. Our communication related to embroidery has come naturally and most Miao women were talkative. They encouraged me to attend Miao embroidery-related traditional and commercial activities to perceive how Miao embroidery was embedded in Butterfly

Village's social structures and Miao women's daily life. As my master told me, learning Miao embroidery "did not mean sit on a chair, but to connect Miao embroidery with your life." In addition, my presence as Shuou's apprentice gave me access to Miao women's everyday life surrounded by Miao embroidery, and allowed my data collection to occur in a daily, natural and relaxed atmosphere. This eased me into conducting open interviews before, after, and sometimes during my times spent embroidering. Avoiding structured interviews and questionnaires- typical methods employed by journalists and many researchers who make shorter visits- I was able to gain the women's trust, which in turn made it possible for them to tell their stories in ways that they chose. (See above for an explanation of why I avoided the structured interview method when interviewing Miao women).

Moreover, the apprenticeship allowed me to access an embodied understanding of local history, culture, social structure and lifestyle. The apprenticeship is a situated learning, which provides the researcher an opportunity to understand a skill itself, the cultural background of the skill, and the craftsmen's subjective experience on the skill. For much of the time during my apprenticeship, the women did not verbally instruct me how to embroidery, but practically demonstrated their daily embroidery practice for me to observe and model. I was situated in the field of Miao embroidery production, display and representation, which provided me an opportunity to acquire and understand "tacit knowledge". The term "tacit knowledge" has been described as skills and experiences which are hard to transfer verbally (Busch, 2008). It has also been termed as "embodied knowledge", emphasising the bodily performance, imitation and practice in the process of teaching and learning (Madhavan, 1998). The key to gain tacit knowledge is to enter the community of practice to establish "shared social experience" and "social intimacy",

in order to perceive the flexible daily practices of tacit knowledge in specific cultural contexts (Hervik, 2003, p. 59). The apprenticeship helped me learn Miao embroidery skills, the symbolic meanings of embroidery patterns and Miao women's personal learning experiences. I gained an important insight into Miao embroidery that was not a static cultural symbol, but a lively and dynamic practice.

This situatedness of the researcher through the embodied learning of a skill provides the kind of understanding of a local world that one cannot gain in other ways. This goes beyond learning the craft skill. According to Lave and Wenger (1991), and Wenger (1999), apprenticeship is a kind of "community of practice", which focuses on the interrelationship between identity-construction, social participation and learning (Lave & Wenger, 1991; Wenger, 1999). In other words, when an anthropologist is learning a specific skill, he/she is simultaneously shaping an apprentice identity. As an apprentice, he/she has opportunities to understand and practice a set of specific traits that correspond with the social role of apprentice, such as behaviour, aesthetic taste, dispositions and ways of thinking. For example, Dorinne K. Kondo realised that Japanese artist's extreme pursuits of exquisite craftsmanship is a kind of self-realisation. "Crafting fine objects, crafts a finer self" indicates the harmony between people, skills, materials and nature (Kondo, 2009, p. 241). The construction of a mature apprentice identity includes bodily and spiritual practice at the same time. Similar examples of gaining an analytical insight through the acquisition of a specific apprentice identity are found in the works of Marchand, who worked as a mud mason in Mali (2008), Goody, who worked as a carpenter in Ghana (1989) and Gowlland, who worked as a ceramic factory worker in China (2012).

My embodied learning of the daily practice of Miao embroidery and my situated presence in this 'community of practice' helped me gain insight into Butterfly Village's flexible and contextual rules and values regarding Miao embroidery and Miao women's embroidery activities. For example, older Miao women wore machine-made embroidery because of their poor eyesight. However, young Miao women wearing machine-embroidered clothes would be criticised as lazy and unskilled. I also learned that most Miao women prefer traditional patterns because they are more popular in in the market, rather than for the visual symbols of Miao culture and history.

Overall, this chapter explained the combination of various research methods that I used during my fieldwork. Combining the apprenticeship approach with interviews of various community actors and participant observation, I was able to navigate a long-debated issue in anthropology: the proper distance between anthropologists and our objects/subjects of study. As stated by Coy, "How close is close enough?" is an essential question for anthropology (1989:107). Dilley (2001) suggests that researchers should be able to switch freely between two identities (researcher/apprentice), and suggests that researchers simultaneously take other field methods to help them remove themselves from the apprentice identity, in order to explore further analytical possibilities as a researcher. My particular combination of fieldwork methods was also designed to allow for a multifaceted understanding of Miao embroidery as an embodied practice with cultural, economic and social implications for the villages concerned, and beyond.

Chapter 3 Ethnic Minority Politics and Identity Representations in China

This chapter provides an overview of key social, political and economic factors that have impacted Miao embroidery since the late 1970s. First, I introduce basic information regarding the Miao as an ethnic community, and later as a designated ethnic minority in the People's Republic of China. Second, I detail how the implementation of reform policies since 1978 to open up the national economy has produced rural-to-urban migration from western inland areas to coastal regions, and the development of ethnic tourism in China, and in particular, in Guizhou. Importantly, these have spurred the commercial development of Miao embroidery and provided economic opportunities for Miao women to engage in related commercial activities.

The Miao as an Ethnic Group

This section provides a general introduction to the Miao, including the population distribution, the past settlement history, social organisation, sub-groups and other basic information.

Population

The Miao are the fifth largest ethnic minority in China. There are 9,426,007 Miao people in China, primarily living in Guizhou, Hunan, Yunan, Guangxi and Sichuan Provinces. Approximately half of the Miao population (4.8 million) live in Guizhou,

which is known for its diversity of ethnic minorities. The Miao are the largest ethnic group in Guizhou, accounting for 12% of the province's total population. Most Miao live in poor mountainous and hilly regions, while a few moves to cities.

Past Settlement History

The Miao have experienced a long and complex migration history. The Miao originally lived in the basin of the Yellow River before the 200 BC. Although their migration routes remain obscure, researchers generally agree they migrated within China and from China to Laos, Thailand, Vietnam and America from 200 BC to the present day. There are two main reasons for their frequent and continual immigration throughout history. Firstly, the Miao suffered overwhelming oppression from the Han. Although they rebelled against the Han repeatedly, they retreated to remote mountain ranges when the Han occupied their territories. Secondly, as mountainous and rocky topography was unsuitable for farming, they moved to other places when the soil fertility was exhausted. Immigration profoundly influenced Miao history as well as their social organisation, ethnic characteristics and culture, which further affects and is reflected in their traditional craft practices.

Social Organisation

Due to the dispersed population, which was a result of historic migration and settlement patterns, the Miao organise their social structure within three levels: sub-groups, clans and families. Researchers generally agree that the Miao consist of many groups, each with their respective culture, customs, and languages. Today, the term "Miao" designates an officially recognised single ethnicity, as a result of the implementation of

the “ethnic classification project (*minzu shibie*)” in China during the 1950s. However, this gives rise to a misunderstanding of the ethnic composition of the Miao. The Miao are scattered in different regions of China as well as neighbouring countries, and their culture and social life vary. Researchers divide the Miao into four cultural groups, three language clans, and many sub-groups by the colours and styles of women’s traditional dresses. The classification of the Miao is especially complicated in the Guizhou Province. According to *The History of the Miao* (Wu, 2008), there are 80 sub-groups of Miao in Guizhou. However, at present even more classifications of Miao sub-groups are claimed to exist among scholars, journalists and the Miao themselves.

In practice, geographical locations are used as a convenient and common measure to distinguish different Miao sub-groups, used by both the Miao themselves and non-Miao observers. The spatial distribution of the Miao follows the pattern of “scattered and integrated (*da san ju xiao ju ju*)”. The Miao are widely spread in China, while sub-groups stay in the same region. In keeping with this distribution, Miao residents from adjacent villages are generally considered as belonging to the same sub-group. Miao people in these villages share the same (or similar) languages, customs and traditional clothing. Moreover, intermarriage between these villages is common, as young women do not need to adapt to an unfamiliar culture, especially by learning a new dialect and embroidery techniques.

The same rule also applies to my field sites. Residents in Butterfly Village ascribe themselves, as well as Miao people in several adjacent Miao villages, as the offspring of Jiugu Miao, an ethnic group that is portrayed as strong, hostile and battle-wise in

historic documents. Butterfly Villagers normally use the phrase “we are the same” or “in our Miao society” to emphasise the same ethnic affiliations of their village and a several of neighbouring Miao villages. Similarly, the Red Miao self-identify as a branch of the Red Embroidery group, which is named for a red style of embroidery shared by several nearby villages, most of which are located in hillsides. Rice farming is their primary means of making living. Silver Village belongs to the Xiajiang Miao group. Members of this group normally live on the highest mountaintops. They are skilled at building wooden stilt houses, rely on dry faming, and possess unique tin embroidery techniques. In sum, members of all three villages consider the “Miao” as a geographical concept more than an official ethnic designation.

The patrilineal clan is the second tier of the social structure for most sub-groups. A clan consists of all members who have the same surname and share a common patrilineal ancestor. The clan system creates vital social ties in Miao villages by promoting the members’ worship of their common patrilineal ancestor and reinforcing a sense of belonging through ritual ceremonies. Members also help each other and share social resources within a clan. Generally, a Miao village consists of three to five clans (as in Butterfly Village and Red Village), while few villages only have a single clan (as in Silver Village). Miao women normally prioritise people from the same clan when they engage in Miao embroidery businesses together.

The last social unit is the patriarchal family, of which there are two forms: the extended family and the nuclear family. Traditionally, the former is the predominant household form. The extended family consists of a married couple, all married sons and their wives

and children, as well as unmarried sons and daughters. According to Kunstadter (1984), the large size of an extended family serves to combine manpower to increase farming production, as well as maintaining kinship cohesion. Today, the nuclear family is more common in Miao society, which only includes a couple and their unmarried children. Their house is normally geographically close to the man's parents' house in order to make it is easier to look after his elderly parents. The transformation from the extended to the nuclear family stems from the predominance of wage labour, which has replaced traditional farming and become a main source of income. This has reduced the need to combine the labour power of all family members at home. The spread of public education and the introduction of modern and Western family values have also driven this transformation.

Marriage

As a rule, a young man is expected to marry a woman of another clan but from the same sub-group. Cross-cousin marriage is the traditional ideal marriage, consisting of a man marrying the daughter of his father's sisters. This type of marriage still exists today in the Guizhou Province. It not only improves inter-clan relations but, more importantly, provides the woman with a kinship-based social relation when she enters into a new clan, where her maternal uncle becomes her father-in-law. There is another prevalent marriage custom called "delayed-transfer marriage (*bu luo fu jia*)", when a married woman stays at her mother's house after the wedding instead of living with her husband. She will not permanently move into her husband's house until the birth of their first child. This custom gives women more time to adapt to the role of the wife.

Livelihood

Traditionally, the Miao relied on subsistence agriculture for their livelihood, supplemented by herding, hunting and gathering. Miao women spent most of their time in the farmlands from dawn to dusk which, combined with the insufficient light at nights, resulted in very limited time to make embroidery. Miao women used winter and summer as lower agricultural seasons to intensively produce their embroidery. At present, with the introduction of the market economy and the development of ethnic tourism in China, agriculture, wage labour and small-scale entrepreneurship (including the production and marketing of Miao embroidery) are their primary means of income. Miao women nowadays have a more flexible schedule for embroidery activities.

Oral Literature and Religion

The Miao have developed a rich oral tradition, which serves as their main form of literature. Legends, myths and historical stories have been kept and passed down through orally by through narrating, singing and even through incantations. Textiles act as a supplemental method of recording important information. Historically, the Miao recorded their history through drawing and embroidering intricate patterns on their fabrics, which their oppressors would not be able to recognise or decipher. Since the late 1950s, the Miao have developed a writing system, supported by the Communist Party of China's (CPC) minority language policy. However, it has so far failed to popularise in the Miao areas.

The Miao are animists and worship their ancestors. As Nicholas Tapp observed (1989, p. 59), the Miao "believ[e] in a variety of natural and supernatural spiritual forces in and

animating all things." This belief has profoundly affected the design of their traditional arts, in which animals, plants and legendary personages are the most popular themes.

The Miao as China's Ethnic Minority

The CPC launched the national ethnic identification project (*minzu shibie*) in 1954, aiming to establish a "unified state of diverse nationalities" *(tongyi de duo minzu guojia)* by incorporating a limited number of the non-Han minorities into the modern Chinese state. In the first census of the People's Republic of China, there were over 400 registered ethnic groups scattered over different provinces in China (Fei, 1981). The sheer number of ethnic minorities made it difficult to implement the Communist Party's promise to ensure the right of all ethnic groups to equal participation in the management of the state and social affairs.[7] The CPC organised many investigations consisting of government officials, ethnologists, linguists and historians to carry out fieldwork into ethnic group settlements over different provinces in China. They identified 55 officially recognised "minority nationalities (*shaoshu minzu*)" (Fei, 1981) from over 400 ethnic groups. Thereby, a new official nationality structure of the population in China was established and elaborated in the *White Paper: Ethnic minorities policy in China*, issued

[7] A direct motivation for the launch of the national ethnic identification project was the uncertainty of the exact number of ethnic minority delegates who would attend the National People's Congress and local people's congresses in the coming 1954. The NPC as the highest organ of state power, combined with regional congresses, embodies the CPC's prescription that "all power of the state belongs to the people." As the deputies to the congresses have the power to elect and appoint members of the administrative, judicial and procuratorial organs of the state, to amend the Constitution, and to determine major state issues, congresses are assembled through the democratic election of delegates. However, facing hundreds of ethnic groups, it was hard to ensure that each group had the delegates to ensure equality between all ethnic groups in China.

by the Information Office of the State Council:

> The People's Republic of China is a united multi-ethnic state founded jointly by the people of all its ethnic groups. So far, there are 56 ethnic groups identified and confirmed by the Central Government, namely, the Han, Mongolian, Hui, Tibetan, Uygur, Miao, Yi, Zhuang, Bouyei, Korean, Manchu, Dong, Yao, Bai, Tujia, Hani, Kazak, Dai, Li, Lisu, Va, She, Gaoshan, Lahu, Shui, Dongxiang, Naxi, Jingpo, Kirgiz, Tu, Daur, Mulam, Qiang, Blang, Salar, Maonan, Gelo, Xibe, Achang, Pumi, Tajik, Nu, Ozbek, Russian, Ewenki, Deang, Bonan, Yugur, Jing, Tatar, Drung, Oroqen, Hezhen, Moinba, Lhoba and Jino. As the majority of the population belongs to the Han ethnic group, China's other 55 ethnic groups are customarily referred to as the national minorities. (Information Office of the State Council of the Peoples Republic of China, 1999)

Despite this official commitment to equality among ethnic groups, prejudice has been entrenched in the official ideology, as reflected in national education policies about ethnic minorities. Since the establishment of the People's Republic of China in 1949, the CCP has launched a series of projects to promote “the economic and social progress of the ethnic minorities and minority areas” (Information Office of the State Council of the Peoples Republic of China, 2009). One of which was what Stevan Harrell called a “civilizing project” (1995, p. 3) aimed at civilising ethnic minorities through the implementation of Han Chinese language education policies. The CCP alleged that the purpose of teaching the Han language and culture was to improve the “quality of the minority population” and the “cultural development in ethnic minority areas”, as well

as "to strengthen understanding and communication" between all ethnic groups (including all 55 minorities plus the dominant Han) (Harrell, 1995, p. 4).[8] However, this policy essentially asserts that, firstly, the Han Chinese language is more advanced and should be promoted among the minorities, and secondly, minority cultures and their own education systems are not recognised in the state education system. This second point is due to the perception that minority peoples who have received their own local education and learned ethnic languages are viewed as "uncivilised" (Harrell, 1995, p. 4). Further, this policy entrenches the dominant position of the Han culture and prevents other cultures and languages from gaining any legitimacy. Thus, the "civilizing project" serves the aim of national unity and stability through assimilating minorities into Han culture (Snavely, 2004, p. 35). As Hansen has stated, the implementation of the Han language and the project to implement Han culture is a crucial means for the CCP to "integrat[e], control, and civilis[e] the various peoples who inhabit the border or peripheral regions" (1999, p. xi). The "civilising project" sends the message to ethnic minorities that they are as culturally backward as they have always been, "to be Han is to be modern" (Yang, 2010, p. 19), and cultural assimilation becomes a prerequisite for modernisation.

Many researchers have analysed the historical and political contexts of the "civilising project" and, as a result, have doubted the validity, objectivity and scientific basis of the ethnic classifications used (Mullaney, 2011; Huang & Shi, 2005). According to

[8] At present, there are a total of around 730,000 people who regard themselves as ethnically different from the 55 officially recognised minorities, but there has been no recognition of any "new" ethnic minorities by the CPC. These groups are described as "undistinguished ethnic groups" (*wei shibie* minzu). See Tapp, 2002.

official doctrine, the effort to classify hundreds of ethnic groups with different self-identities into 55 rigidly defined ethnic categories was based on Stalin's four characteristics of nationality, namely common territory, language, common economical life and culture, and psychological nature (Mullaney, 2004; Schein, 1997). In reality, however, the implementation of the criteria was patchy. For example, Xiaotong Fei (1981)[9] points out the complexity of local communities' self-identification. According to Fei, Chuanqing in Guizhou Province insisted that they were a separate ethnic group, as they had unique features in language, costume and location. However, in order to "strengthen solidarity between Chuanqing and Han" and "eliminate psychological barriers between Chuanqing and Han people", CPC researchers classified Chuanqing as a branch of Han in the project (Fei, 1981, p. 5). For another example, Naxi and Mosuo were two communities located nearby in Yunnan Province for a long time. The main difference between them was that Mosuo was a matrilineal community, while Naxi was a patrilineal community. In the "civilising project", however, Mosuo was viewed as an off-shoot of the Naxi, and its unique culture was viewed as the result of a lesser degree of Sinicisation: a more 'backwards', 'rural' and 'less-educated' matrilineal tribe (McKhann, 1995). The government rejected a Mosuo petition to become a separate minority for the same reason in 1993 (Mathieu, 1996). As Mullaney points out (2011), the CPC's official taxonomy of ethnic minorities was not only based on a biased assessment of minorities' history, language, religion, and economic potential, but it also exercised the CPC's political control over ethnic issues through melding subsets of

[9] Xiaotong Fei was a pioneering anthropologist and sociologist in China. He was instrumental in the ethnic identification project between the 1950s and 1970s, and did a lot of surveys in Guizhou, Guangxi and Yunnan Provinces. Since the late 1970s, Fei published several influential articles based on his experiences and his rethinking of the project, and pointed out several problems in the process of identifying non-Han minorities.

communities into predetermined ethnic groups.

It has also been suggested that the CPC has solidified the dominant Han majority's leadership to consolidate its political power in the large multinational state, as the Han Chinese predominated the CCP's major positions of power (Zang, 1998). The ethnic identification project strengthened the boundary between the Han and the non-Han (Fei, 1981), and has established a hierarchy where the Han are positioned as forming a valued socialist society, while other ethnic minorities are at "the geographical, social, and cultural periphery" (Harrell, 1995, p. 27), lagging behind at more primitive stages of civilisation: "Some (ethnic groups) are feudal serfdom, some are slavery society, and some are still in primitive society" (Ma, 1981, p. 3). As Hasmath highlights, the political implications of this project to classify ethnicities is that it reinforces "the Communists' portrayal of the Han as the 'vanguard' of the people's revolution. Ethnic minorities were thus encouraged to follow the Han example" (2016, p. 90). Oakes also expresses a similar viewpoint: ranking different stages of civilisation reflected the cultural and economic distances between the Han and other ethnic minorities, and the assimilation into the Han culture is made necessary in order to develop and modernise ethnic minority areas (1999). Under this system, being a member of one of 55 recognised ethnic minorities was frequently inconsistent with people's self-identity, and they were considered culturally inferior in contrast to the 'advanced and modern' Han culture (Hasmath, 2014b).

The Miao were identified as an officially recognised ethnic group in China in 1957,

among the first group to be recognised ethnic minorities.[10] As most Miao subgroups inhabited the less developed regions of China and their culture was historically viewed as inferior to Han, they were defined as a primitive communal society (Harrell, 1995, p. 108). The ethnic identification project claimed that the Miao "lack[ed] sufficiently developed 'culture' to achieve modernity" (Oakes, 1998, p. 9). As discussed in Chapter 1, China's discourse of modernity is highly developmentalist, and its praising of the 'modern and advanced' Han rests on the construction of the socially, economically, and politically inferior position of ethnic minorities. The "Miao", as a collective name, is somewhat problematic as the criteria used in the ethnic identification project (common language, territory, economy, and psychological characteristics) was not applied to integrate various ethnic communities scattered over several provinces into the Miao category. There was no common economic system, territorial unity, nor a common language in these minorities. In particular, there was considerable variation in their cultural features and social lives, including women's clothing and ornaments, architectural styles, religion and ceremonies (Diamond, 1995, pp. 92-116). In fact, Xiaotong Fei demonstrated (1985) that the Miao populations showed considerable cultural and linguistic differences and the term "Miao" was more of a conventional signifier for non-Han peoples in the southern regions. In this context, some Miao communities did not willingly accept their official designation and tried to insist on asserting their own identities. For example, the Ge are a self-recognised ethnic group inhabiting the south-eastern Guizhou Province. They were categorised as a subgroup of the Miao, a nationally recognised ethnic minority. However, the Ge claimed an identity independent of the Miao not only because of their cultural uniqueness, but also because

[10] There were eleven ethnic groups that were first recognised by the government of China as official minority groups. See Fei, 1981.

of their historic suffering in a conflict with the Miao during the Qing Dynasty. A historical document reported that "the Miao killed and raped more than 2000 of the Ge" during a war in 1858 (Lo & Wang, 1879/1988, p. 96). The Ge were reportedly furious about the enforced label of the Miao identity and had repeatedly demanded a separate identity during the 1980s and 1990s. At present, the Ge are officially categorised as an "undistinguished ethnic group". Although the collective term "Miao" incorporates considerable similarities as well as differences within Miao subgroups and is not necessarily consistent with how these subgroups self-identity, it has continued to be listed on the "taxonomic orthodoxy" of Chinese ethnic groups, and commonly appears in official discourses and the public media. Local ethnic communities have little choice but accept their designation.

The forced designation, along with negative images of the Miao, are both based on historical precedents. In the Qing Dynasty, the Han categorised Miao ethnic subgroups in Guizhou and Yunnan Provinces using two different types (Crossley, Siu & Sutton, 2006; Fiskesjö, 1999). The first type was defined as the "*Shu* Miao (literally, cooked Miao)", who lived near Han settlements under the political control of the local Han government, paid taxes, and had exhibited the influence of Han culture through their habits, customs and language use. The second type was the "*Sheng* Miao (literally, raw Miao)", referring to those who lived in remote areas, paid no taxes, resisted political control and were unassimilated into Han culture. The Miao were characterised by the Central government as "barbaric" (Aibida, 1750/1992, cited in Yang 2010: p. 23), and a Guizhou Han governor once described them as a "swarm like bees and ants … They are addicted to violence" (Aibida, 1750/1992, cited in Yang 2010: p. 15). It is worth noting that Butterfly Village was a main military foothold of a Miao uprising against

the dominance of the Han Chinese during the Qing dynasty, and members of the village were classified as "Sheng Miao" (Lawson, 2017). According to a local historical record from the Qing dynasty, Miao people in Shidong region were described as violent and aggressive, refusing assimilation (Shi, 1986). Suffering from discrimination and marginalisation, Miao people rose up against the Han government many times (Liang, 2009; Jenks, 1994), which led to them being identified in Han society with characteristic such as "barbaric" (Yang, 2010). A Guizhou Han governor once described the Miao as a "swarm like bees and ants … They are addicted to violence" (Aibida, 1750/1992, cited in Yang 2010: p. 15). It is worth noting that Butterfly Village was a main military foothold of a Miao uprising against the governance of the Han Chinese during the Qing dynasty, and members of the village were classified as "*Sheng* Miao". According to a local historical record from the Qing dynasty, Miao people in this village were described as violent and aggressive, refusing assimilation (Lawson, 2017).[11]

Self-alienation of Miao Identity Before the Mid-1980s

This Han-centered portrait of Miao culture and history had strongly affected Miao people's self-identification in the past. From the Qing Dynasty until the mid-1980s, the Miao, as one of the most economically marginalised ethnic minority groups in China, and the Han portrayal of the Miao as "barbarians" has led to many Miao to feel ashamed

[11] The term "Miao" has even been an adjective synonym with coarse in the Han language. Miao intellectual Shi Qigui once said: "The Han people often use 'Miao' to describe ugly things. For example, they call rustic bowls and rough chopsticks 'Miao bowls' and 'Miao chopsticks'. People with an ugly face are described as having a 'Miao appearance', and ill-mannered is replaced by 'Miao behavior' (1986, pp. 207-208).

about their ethnic identity (Yang, Z.Q, 2010) (for example, see my earlier discussion regarding the implementation of the minority education policy in this chapter).

Clothing has been a prominent cultural and political tool for the project of modernisation in China. Since 1978, the implementation of the open-door policy has brought economic prosperity along with immense social changes to China (Guthrie, 2012). An influx of Western products and lifestyles fuelled new consumer desires in post-socialist China, resulting in the surging consumption of Western-style clothing in the 1980s and 1990s among urban Chinese (Garrett, 2012; Finnane, 2008). Chinese leaders frequently wore Western-style suits on diplomatic occasions in the 1980s, which symbolically reinforced the CCP's new emphasis on liberalisation and internationalisation. Dikötter Frank explains that the consumption of modern things during the economic reform era had become a way to propel China "into the universe of 'civilized' nations and join a universal march towards a better future" (2007, p. 2). 'Modern' Western attire became yet another way to signal the power, cosmopolitanism and civility of the Han Chinese, in direct contrast with the 'backward' ethnic minorities, thus reinforcing political, economic and cultural ethnic-based hierarchies. This symbolically portrayed the Han as 'moving forward', becoming part of the modern capitalist world, while minorities were marked by tradition and tied to notions of unchanging cultural roots (Bulag, 2010). The Miao, like other minority groups in China, continued to be constructed by the popular Han imaginary as the exotic, feminised and even erotic 'Other' (Harrell, 2012; McCarthy, 2009; Gladney, 2004b — also see Chapter 5).

Miao people were also influenced by these new consumer desires, eagerly acquiring cigarettes, lipsticks, pagers and other 'fancy' products to resemble Han urbanites, who represented modern people who possessed "accoutrements of modernity" (Schein, 2000, p. 267). Some Miao men wore urban Han or Western clothing and echoed the discriminatory sentiments of the Han by considering their compatriots in traditional Miao attire to be conservative and backward. In such cases, the Miao "played their part in constructing a modernity through performative disavowals of the very tradition by which they had come to be recognised" (Schein, 2000, p. 24).[12]

The Miao ethnic group, along with other ethnic groups, have been broadly characterised by the Han as backward, inferior, dangerous and peripheral in the context of their economic and political marginalisation. In contrast, the Han depict themselves as civilised, advanced and central (McCarthy, 2009; Yi, 2008; Gladney 1994; 2004a; Litzinger, 2000; Harrell et al., 1995). By designating other ethnic groups as the cultural and exotic Other, the Han ensured its cultural and political superiority and placed itself at the forefront of China's development (Carrico, 2017).

The Implementation of the Minority Education Policy

The central and provincial governments have implemented various measures to improve education for the various ethnic minorities. First, a national legislative

[12] Through such actions, Miao political elites also highlighted their compliance with Han leadership, thus conforming to state taxonomic ethnic classifications, and maintaining Han dominance and superiority within that classificatory system.

program has been universalised since 1986, mandating a compulsory nine years of education. This program aims to ensure access to primary and junior schools among school-aged children (6–17 years old), especially in rural and minority areas (Gao, 2008). In the area of higher education, a range of national colleges and universities have been established, which set aside certain quotas for minority students. Minority students who take the national college entrance examination receive 20–40 bonus points on their score (Postiglione, 1999). Moreover, minority students are guaranteed free education during the compulsory nine-year period and receive subsidies at colleges and universities. In addition, there are various regional policies to lower entry standards and lighten the financial burden for minority students in order to ensure sufficient enrolment rates.

However, these policies do not yield immediate educational results in reality (Snavely, 2004). For example, the implementation of the nine-year compulsory education program in Guizhou Province for the Miao minority has taken 20 years, while the drop-out rates have remained high to this day (Hansen, 2011). Another practical issue hindering the implementation of policies for the education of minority groups is the fact that curriculums are much harder for minority students to follow, linguistically and culturally. Minority education adopts the unified teaching materials compiled in the Han language, and a considerable amount of teaching material content is drawn from Han culture. Even as minority students enjoy preferential policies, they often lack the training to pass the college entrance examinations in the state education system, and many of them drop out before finishing middle school. The school dropout rates are high in minority regions, which has triggered academic discussions about the tension between mono-cultural education and the multicultural condition in China (Zhao, 2018),

as well as the attempt to compile local knowledge into a curriculum adopted in minority areas (Leibold & Chen, 2014; Lin, 1997).

In cases where Miao people do overcome inherent obstacles associated with the Han-dominated education systems, they often enjoy concrete economic and social benefits and achieve social mobility (Wan, 2007). For example, education increases chances of getting a good job, as the ability of communicating using the Han language is required for most well-paid jobs in China today. For those who seek to migrate to cities, a diploma makes it relatively easy to find a job. Another benefit of education relates to the raising of social status of minority peoples. The benefits of this kind of education are inseparable from central policies for minority education: training ethnic cadres in minority areas to realise regional autonomy for ethnic minorities in China. According to The Law on Regional Ethnic Autonomy, each autonomous area should have a local government with a proportion of its governing members and its leader as representing the ethnic minority of that region. Ethnic cadres are expected to understand Han culture, national policies and the current ideology in China. They are also expected to be familiar with the culture, religion and the organisational structure of local communities. In the system of minority education, national colleges and universities are enlisted to foster ethnic cadres. Therefore, minority individuals can become government officials by means of education. The preferential treatment of minority people in higher education has the potential to elevate them to high-ranking positions in the regions they live.

All the concrete benefits notwithstanding, tension emerges in ethnic minority

communities regarding their engagement in education. This is because the standardised Han-driven education system instils in minority student notions that the Han culture is modern and that the minority cultures obstruct the development and modernisation of minority areas (Postiglione, 2014). This typically elicits one of two responses among members of ethnic minorities. One response is to learn to identify with the Han worldview and become eager to learn the 'modern' Han culture and to be rid of the 'inferior' minority ethnic culture. This view sees education as a bridge to well-paying jobs, higher social class, and relatively developed cities, and those that hold it will overcome the barrier of language and culture to achieve their aims. Ogbu calls this the "folk theory of success" (1982; 1987). The other response is to reject assimilation into the Han culture by refusing to participate in educational institutions. These people fear that state education will strip them of their ethnic identity and result in cultural assimilation. This is not unwarranted, as the state educational project "succeeds in forming national sentiment and eliminating or reducing ethnic identity" (Hansen, 1999, p. xiii). This situation demonstrates the structural disadvantages the Miao collectively face as they come of age, and their potentially lasting impact on their employment prospects. In this context, being able to make one's own living through ethnic crafts is highly valuable for Miao women, who have fewer opportunities to earn a decent income.

Miao students have faced considerable discrimination and stigma in China's education systems. In order to culturally indoctrinate the Miao people, the Qing government offered special places for Miao students in local schools, encouraging them learn Han writing and culture. They were designated as "Miao students" on admissions lists.

However, the Zhengyuan County government[13] received a petition by the Miao, demanding the removal of the "Miao student" designation because students felt it implied cultural inferiority and they were reluctant to be recognised as Miao by other students. Similarly, a sub-ethnic group that has immigrated to Western countries has named themselves "Hmong" rather than "Miao" because of the derogatory connotations with the name "Miao" (Schein, 2006, p. 96). Some Miao communities, such as the Dong, have preferred to become assimilated into Han culture and adopt the Han identity. The Dong had historically been viewed as a Miao tribe, but actively absorbed the Han culture, dressed in Han clothing, and avoided referring to themselves as "Dong" or "Miao" (Cornet, 2010). At the end of the Qing dynasty, many Dong were employed by the local government, and no one in the community identified themselves as Miao. In the Xiangxi Miao region of Hunan Province,[14] some Miao residents bribed Han landlords in order to change their registered ethnic identity to Han. These examples show that many among the Miao attempted to distance themselves from their ethnic identity and chose a path of assimilation into Han culture.

Economic Growth and Social Transformation in Reform Era China

The commodification of Miao embroidery is grounded in the socioeconomic context of the modernisation of China, and specifically driven by the economic reforms that have taken place since 1978. The policy of economic reform, literally "reform and opening-

[13] Zhengyuan County is an administrative district located in eastern part of Guizhou Province. It has been a main habitat of the Miao.
[14] Although this event happened in Xiangxi, Hunan Province, the two Miao regions were all under Qing jurisdiction and the locals were viewed as "barbarians" by the Han. This example illustrates a common psychological character of Miao people in south-west China in the Qing empire.

up (*gaige kaifang*)", refers to a market-oriented national reform program led by Deng Xiaoping, the paramount leader of the People's Republic of China from 1978 to 1989. During the pre-reform period, the Chinese central government tightly controlled commodity trade, which impaired import and export demands and the economic growth. During the reform era, centralised foreign trade planning was gradually replaced by a market-oriented trading system, which led to a dramatic increase in the volume of China's foreign trade (Tang, E. A. Selvanathan & S. Selvanathan, 2008; Yao, 2006; Chen, Chang & Zhang, 1995). This stimulated GDP, transforming the nation itself from one of the poorest countries in the world to achieving real per capita GDP at an average rate exceeding eight percent per year (X. Zhu, 2012).

Thanks to thriving foreign trade and flows of foreign direct investment (FDI), the Chinese economy grew and shifted from agriculture to export-led manufacturing and services. The establishment of Special Economic Zones (SEZ) in coastal regions began in 1979 to offer tax and other incentives to attract FDI, and factories engaged in processing trade (Gul & Lu, 2011; Wall, 1993).

The transition to a 'world factory' not only helped China's national economy grow but also spurred ordinary people's pent-up desire to earn cash. The government encouraged people to participate in market-oriented economic activities (White, 1993), and implemented various policies to promote the development of self-employment, small- and middle-sized enterprises in urban areas (Chen, 2006). Traditional socialist values were replaced by the new "get rich" ethos (Deng & Cordilia, 1999). The newly emerging appetite for income-earning activities was one driver of rural–urban

migration that began in the 1980s, which significantly changed the ways in which rural people, many of whom are ethnic minorities, earn a living.

The Expansion of Rural to Urban Migration in the 1980s and 1990s

China experienced an expansion of rural–urban migrants between the 1980s and 1990s. This expansion was a product of rural unemployment caused by agriculture reforms, the relaxation of the Chinese household registration system, and increasing urban employment opportunities for rural residents due to the rise of manufacturing in SEZs and other urban areas.

The agricultural reforms changed rural people's livelihoods by shifting the collective farming system to a market-oriented and household-based one called the Household Responsibility System (HRS) (Chen, 2017; McKinley, 1996). HRS released a massive number of rural people from farming, which resulted in a surplus in the rural labour force (Athukorala & Wei, 2018; Cai & Wang, 2008). A reform of the household registration system (Hukou) in the 1980s allowed geographical movements of rural people to cities. This was designed to alleviate rural unemployment and address labour shortages in the urban manufacturing sector. The Hukou, a system of residence-based identification, was established in the late 1950s as part of Soviet-style industrialisation policies to prioritise the productivity and living standards of urban workers (Zweig, 1997). Rural households were designated as agricultural (*nongye hukou*) and, unlike urban residents (which were designated as non-agricultural, or *feinongye*), they were deemed unlikely to greatly contribute to urban industrial works and therefore excluded

from welfare services and economic activities in cities. While resources were funnelled into the urban-industrial sector, rural areas were squeezed for agricultural and other primary products. The Hukou system was one important way to maintain this imbalanced distribution of social and economic resources in the pre-reform period (Chan & Zhang, 1999). However, the rising demand for labour in the newly established SEZs led to a relaxation of the Hukou conditions.[15] This enabled the mobilisation of rural labour for low-wage, low-status manufacturing jobs, which were shunned by urbanites for their physically exhausting nature and long hours of work. Known as the "floating population (*liudong renkou*)", tens of millions of peasants from diverse ethnic, regional and educational backgrounds poured into cities to seek employment and small business opportunities (Li, 2006; Shen & Huang, 2003; Goodkind & West, 2002).

Gender Difference and Inequality among Rural–Urban Migrants

Although both men and women streamed into urban regions in search of wage work, they were largely segregated throughout this process. Generally, female migrants engaged in service labour at hotels and restaurants, as well as in light industrial work, especially at textile and garment factories. Male migrants tended to engage in physically demanding work such as transport, construction and delivery, as well as marketing and trading work (Cook & Dong, 2011). On the whole, rural women were excluded from lucrative off-farm activities: the ratio of women to men was 1:2 in Shanghai and Beijing

[15] This involved the creation of three distinct hukou categories: permanent hukou (*chang zhu hukou*), temporary hukou (*zan zhu hukou*), and visitor hukou (*ji zhu hukou*). Migrant workers in cities could obtain temporary or visitor hukou. See Afridi, Li & Ren, 2015.

in 1994 (Lu, 2002). The disproportion was a product of the traditional gendered division of labour in peasant families (Lu, 2002). Social conventions tended to expect women to assume household duties, which hindered their chance to leave their village (Knight & Song, 2003). Moreover, in their husband's absence, many 'left-behind' women also became responsible for agricultural work, which was originally performed by men (Chang, Dong & MacPhail, 2011). Instead of offering lucrative urban employment, economic reforms continued to keep more rural women in villages than men and increased the burden of farm work for them (Xia & Simmons, 2004). Miao women in rural China were not an exception, and this is why the subsequent development of the tourist economy and the commodification of traditional Miao embroidery for this new market provided village-bound women a new and remarkable avenue to earn cash.

The Development of Ethnic Tourism in China Since the 1980s

In this section, I examine the emergence and development of ethnic tourism since the 1980s as another strategy of attracting FDI. In the pre-reform period (1949–1978), domestic tourism was rare, and outbound tourism was a form of political activity for diplomats and government officials (G. Zhang, Pine & H. Zhang, 2000). Travel agents only offered inbound services for overseas Chinese and foreigners with official permission (Yang & Wall, 2014). During the economic reform period, the central government saw tourism as a tool to earn foreign exchange, boost domestic consumption, and promote employment, economic development and poverty reduction in regional and rural areas. Supported by a series of measures (Shen et al., 2018; Zhang,

Chong & Ap, 1999),[16] both domestic and inbound tourism have flourished in the last few decades, significantly contributing to the country's GDP, regional development and poverty reduction.[17]

As with other developing countries, the promotion of ethnic culture, especially ethnic artefacts, ceremonies and the 'exotic' people themselves were integral to the development of tourism (Oakes, 1997; 1998; Yan & Santos, 2009; Yang, Wall & Smith, 2008). As a multi-ethnic nation, China had ample resources to utilise, and ethnic tourism became one of the priority areas in the national tourism development plan in the 1980s (Harrell, 2001; Sofield & Li, 1998). These plans prioritised Guizhou, Yunnan, Guangxi and other provinces that have the most concentrated populations of diverse ethnic minorities (Abrahams, 2015; Jackson, 2006; Walsh & Swain, 2004). My primary field site, Butterfly Village is located in Guizhou Province, where the Miao dominate the local population.

The promotion of ethnic tourism in these provinces sought to rectify the uneven economic development between the interior and western regions and the coastal urban areas, which thrived due to the export-led manufacturing in SEZs (Goodman, 2004).

---

[16] Main measures include improving infrastructure and facilities, increasing natural and cultural tourism attractions, enhancing tourism service qualities, simplifying visa requirements for foreigners, and reforming the public holiday system.

[17] All these positive constructions are reflected in China's official economic data. According to the National Bureau of Statistics of China, the total contribution of tourism to GDP was US$252.06 billion, 3.43% of GDP in 1995. By 2015, this proportion had considerably increased to US$6404.42 billion, 5.79% of GDP. See China Statistical Yearbook, compiled by National Bureau of Statistics of China, Beijing: China Statistics of Press 2015. Accessed at: http://www.stats.gov.cn/tjsj/ndsj/2015/indexch.htm

This effort continued into the 2000s. In 2000, the central government initiated a campaign to "Open Up the West (*xibu da kaifa*)" and designated twelve provinces, including Guizhou, as the west, which they characterised by "economic underdevelopment, a lack of economic infrastructure and large number of minority nationalities, as well as being in the far interior of the land mass" (Goodman, 2004, p. 6). Such initiatives also hoped to lure migrant workers from the saturated labour market in eastern areas back to western regions through providing financial supports and preferential policies (Holbig, 2004). As Su (2009) and Oakes (2016) explain, the main focus was urbanising the countryside, for example by means such as creating orderly villages and refurbishing traditional wooden Miao village houses into the urban aesthetic of cement buildings.

It is noteworthy that the 2000 campaign portrayed ethnic minorities in the west, who comprised about two-thirds of the total population in the area, not only as economically underdeveloped, but also underdeveloped socially and culturally. State discourses and documents considered the cause of rural poverty to be the 'low quality' of rural residents. The term "*suzhi* (quality)" originally referred to self-cultivation through education. However, it has become a weapon of snobbery since the 1980s, as "urban residents complained about the 'low quality' of the rural migrants flooding their cities" (Hsu, 2017; p. 12), ethnic minorities are considered to have a 'small farmer mentality' due to lifestyles based on (semi)subsistence. The governments considered such self-sufficiency as a hindrance to modern, market-oriented economic development. In this context, central and local governments view the development of ethnic tourism as an effective way to 'civilise' the rural population. Tourism links villages with the outside world, which in turn integrates ethnic minorities into Han-dominated mainstream

society by assimilating them into Han culture and the market economy.

The Development of Ethnic Tourism in Guizhou

The Guizhou provincial government began promoting tourism during the early 1980s, with the aim of fuelling economic growth, creating trade opportunities and fostering cultural exchanges with other provinces and countries. The Guizhou Tourism Bureau (GTB) was established in 1981, the first provincial government to have made such a move. Over the next five years (1981–1985), Guizhou received 70,000 domestic and 50,000 foreign visitors, earning US$500,000 (Guizhou Chronicles Compilation Committee, 2009). The GTB report, titled *Guizhou Provincial Tourism Development Master Plan*, sets out a plan for Guizhou to become one of the most developed provinces in terms of tourism by the year 2010. Guizhou tourist attractions were divided into two types: 1) the natural landscape, such as caves, waterfalls and karst landscapes; 2) the cultures of 17 ethnic groups in the province, including their traditional customs, festivals and folk architectures. The successful development and promotion of ethnic tourism in Guizhou eventually had a tremendous impact on Miao communities, particularly through the commodification of Miao culture generally and their embroidery in particular.[18]

However, for the first 15 years, the provincial government was inclined to develop and advertise natural tourism while ignoring ethnic tourism. For example, in *the Guizhou Tour Guide*, an official travel brochure by GTB published in 2000, the introduction of

[18] Interview with X. Wu, the director of tourism development plan office of Guizhou Province Tourism, October 2013.

different natural resources occupied 130 pages, while just two paragraphs were devoted to a general introduction of Miao and Dong ethnic customs (2000). Moreover, the government described Guizhou as a "Park Province" and "Karst Kingdom", aiming to highlight the mountain ecology. The slogan "Let the World Know Guizhou" was widely used in various tourism-related festivals, advertising waterfalls, lakes, karst caves and other landscapes as treasures of the province. The provincial government's inclination to promote natural tourist attractions was motivated by efforts to improve its marginal status. During the 1980s and 1990s, Guizhou's GDP continually ranked 25 to 27 among the 32 provinces nationally (Oakes, 1999). The provincial enrolment rate of school-age children occupied only around 91.36% while the national average was 97.8% in 1990 (National Bureau of Statistics and State Ethnic Affairs Commission, 1990). A popular proverb says that "Guizhou's roads are rocky. Guizhou's weather is gloomy. Guizhou's people are poor." This is supported by statistical data. Guizhou's poverty has been largely due to the economic underdevelopment of its ethnic regions. In 1990, 31 out of 86 counties in the province were designated as "impoverished counties", of which 21 were in ethnic minority regions (Oakes, 1999).

During this period, the local government showed a contradictory attitude toward ethnic cultures. On the one hand, it viewed ethnic cultures as a tradition to be preserved amid the rapid modernisation and industrialisation of China as a nation. Because ethnic groups of Guizhou maintained their unique culture through generations, tourists had the opportunity to experience the exotic atmosphere and satisfy their nostalgia (Oakes, 1997). On the other hand, paradoxically, the government viewed ethnic groups and their unique cultures as obstructions to modernising Guizhou. The image of Guizhou as economically underdeveloped and culturally backward was frequently translated into

an image of ethnic groups living in a barren highland covered by eroded limestone.[19] In addition, the adult literacy rate among ethnic minorities was low, which caused further discrimination by the dominant Han.[20] Early in this period, the Guizhou government promoted ethnic tourism with the hope that ethnic peoples would become open-minded and change their "backward" traditional ways by interacting with tourists. For example, a conference was held in 1991 to assess the influence of tourism on the Buyi ethnic group (Long, 1991). Half of the attendees were government officials from the Guizhou Ethnic Affairs Commission and Cultural Department. The subsequent report affirmed the positive influence of tourism on cultivating Buyi people's 'modern' thinking: "At first, the local people were willing to sing a song for free for tourists. However, they have recently begun charging a fee. This shows their budding commodity consciousness" (Long, 1991). This example shows that, by 'modern', the governments meant engaged in the market economy by commodifying their traditions.

To achieve the two-pronged aim of economic development and cultural de-stigmatisation, the Guizhou government vigorously explored the commercial value of local ethnic cultures, as well as encouraged ethnic groups to market their cultures to tourists. One of Deng Xiaoping's well-known quotes aptly describes the characteristics of Guizhou's ethnic tourism development in the 1980s: "It doesn't matter whether a cat is black or white, as long as it catches mice" (as cited in Littlemore, 2003, p. 277). As

---

[19] This devaluation of and disdain towards the Miao has a historical precedence, harking back to the notion of them as "uncivilised barbarians" popular during the Qing Dynasty (1644–1911), as discussed above. The most important government policy at the time was to subdue ethnic groups in the south-west.

[20] The illiteracy rate among the Miao reached 47.8% in 1990, while the national average was 22.2%. See National Bureau of Statistics and State Ethnic Affairs Commission, 1990.

will be discussed in chapter 5, this drive created mixed consequences for the Miao in the village I studied. Improved economic conditions through the commodification of embroidery benefitted many households and created new forms of entrepreneurship. But the unsustainable development of the tourist economy and rampant and uncontrolled trading of coveted vintage embroideries led to a massive loss of cultural heritage items to non-Miao regions in the country, as well as abroad.

As discussed above, Chinese central and local governments have been heavily involved in the development of ethnic tourism. They have functioned as "planners of tourist development, as marketer [sic]of cultural meanings, and as arbiter [sic] of cultural practices displayed to tourists" (Wood, 1984: 353). Government authorities, to a great extent, have the power to decide what ethnic culture practices are chosen for official promotion to establish images of exotic 'other' to satisfy tourists' imagination (Blum 2001). Most ethnic cultural activities (including ceremonies, dances, skills, customs and rituals) and material culture (including handicraft, costume, food and architectures) are included in government promotions and therefore officially endorsed.[21]

The Significance of the Miao Communities for Ethnic Tourism in Guizhou

[21] The governments provide certain autonomous spaces for ethnic minorities, in which ethnic minorities have freedom to preserve or reform their regions beliefs (Mackerras, 2003; Sautman, 1999). While religious elements of cultural practices have significant roles in ethnic knowledge transmission and training in the villages, they are often excluded to respect the cultural restrictions placed on their public disclosure, as well as to protect sacred sites. For a more detailed discussion, see Heberer, 2017; Borchert, 2005.

During the development of their ethnic tourism, the Guizhou government prioritised the Miao over other ethnic groups. For example, the GTB poured financial and human resources in establishing an exquisite "ethnic culture tourism route" in Qiandongnan Miao and Dong Autonomous Prefecture in the 1990s (Guizhou Chronicles Compilation Committee, 2009). The prefecture is home to the largest Miao settlement area in China, and approximately 1,500 Miao villages and a total 1.5 million Miao people are scattered throughout the mountainous area. In 2004, the Guizhou provincial government formulated the *Guizhou Tourism Development Master Plan* in cooperation with the World Tourism Organization and gained financial support from the World Bank to develop specific regions and projects which were designated as "A" in the plan. Seventeen villages were designated "A" in Guizhou, out of a total of 125 ethnic villages and 17 ethnic groups reviewed in the plan, and of these nine were Miao villages (World Tourism Organization, China National Tourism Administration, and Guizhou Province Tourism Bureau, 2004).

Secondly, the Guizhou government showed a preference to Miao culture as a representation of the provincial attractive and unique ethnic culture in tourism promotion and marketing activities. For example, in adverting Guizhou's ethnic culture, GTB mostly used images of Miao women in official tourism posters and brochures. The following picture is the cover of the Guizhou Tourist Map, which was compiled and published by GTB in 1998. Two smiling young Miao women wear their traditional Miao embroidered costume and silver ornaments, which vividly presented Guizhou's attractive and authentic ethnic culture.

Photo 3.1. The cover of the Guizhou Tourist Map.

Photo by author.

The Guizhou government also began to expand its sale of ethnic souvenirs into the domestic and overseas markets since the year 2000. They held ethnic craft and garment exhibitions both domestically and abroad to attract investors to establish sustainable commercial ethnic craft projects. Miao crafts were given a much larger representation among the various exhibits. Moreover, Miao entrepreneurs were frequently invited to attend exhibitions to promote their embroidery, batik fabric, silver ornaments and other traditional Miao crafts. It is evident that the Guizhou government paid more attention to developing the promotion and sale of Miao culture in comparison with other minority

groups.

There were several reasons the Guizhou government prioritised Miao cultural tourism. Firstly, the openness of Miao ethnic villages as tourist sites directly and effectively contributed to poverty reduction in Guizhou. As mentioned before, Miao is the largest ethnic group in Guizhou, and most Miao villages were in mountainous areas designated as poor counties by the Chinese central government. The Guizhou government's targeted investment in the tourist industry of many Miao regions brought about a fast reduction of Guizhou's rural poverty rate (Donaldson, 2007).

For example, the "ethnic culture tourism route" in Qiangdongnan Prefecture has quickly become Guizhou's most popular ethnic tourist route. According to the *Rural Tourism Plan 2006–2020*, issued by Guizhou Provincial Tourism Administration, between 2001 and 2005 there were 214,226 people lifted out of poverty, which accounted for 21.4% of the total impoverished population in the prefecture (Guizhou Provincial Tourism Administration, 2007). Xijiang Village in Leishan county was ranked as a 4A-level tourist spot by the China National Tourism Administration. It is known for its traditional Miao architecture of stilted wooden houses built on mountains, as well as the traditional Miao lifestyle of its residents. In the last a few decades, Xijiang experienced a substantial growth in tourist arrivals: from 7,800 in 2000 to 7,531,700 in 2018. The tourist revenue rose sharply from 170,000 *yuan* (AU$ 3,400) in 2000 to

6,401,000,000 *yuan* (AU$ 1,280,200,000) in 2018.[22] As the Guizhou government strategically ties tourism development with poverty reduction, targeting Miao villages has proved to be one of the most effective approaches.

A second reason the government prioritised the Miao culture relates to the way in which the diversity and richness of Miao culture lays a foundation for tourist development. As mentioned before, there are various subgroups of Miao living in Guizhou with their own distinctive cultural and social traits. A proverb vividly describes this situation: "travel ten miles and you will see a different sky; travel 50km you will see a different custom (*shili bu tong tian; baili bu tong su*)". Miao cultural resources are abundant and diverse even within one subgroup. The Guizhou government views Miao cultural diversity as a special attraction for tourists. For example, GTA used a proverb to illustrate Miao culture in an official Guizhou travel guidebook: "Big festival was held every three days; Small festival was held every day (*dajie san liu jiu; xiaojie tian tian you*) (Guizhou Tourism Bureau, 2002, p.65)". In contrast, the description of other ethnic cultures was more clichéd and even dull, using terms such as "exotic," "authentic" and "traditional". This shows that the Guizhou government not only paid attention to promoting different ethnic cultures, but also to the diversity of Miao culture.

Thirdly, Miao customs better meet the expectations of tourists. According to the curator of Shanghai Museum, the costumes of the Buyi, Dong and Shui have been influenced

---

[22] Statistical Yearbook of Guizhou (Guizhou Tongji Nianjian). Beijing: China Press of Statistics 2000. Statistical Yearbook of Guizhou (Guizhou Tongji Nianjian). Beijing: China Press of Statistics 2008.

by Han clothes to different degrees, which is reflected in the simplified headdresses and the use of dark colours. However, Miao headdresses have changed little since the Qing Dynasty, especially the headdress of "raw Miao (*sheng Miao*)" subgroups (Li, 2002). Therefore, Miao embroidery creates an exotic image for domestic Han tourists due to its distinctive contrast with Han clothes.

Moreover, the Guizhou government saw Miao customs as a crucial means to attract foreign tourists. Miao embroidery was popular in the global art market due to its high aesthetic and craft values. A growing number of foreign collectors frequently came to Miao villages to look for and purchase exquisite Miao embroideries from the local residents. As Tim Oakes argued (1997, p. 50):

> In the early 1980s teams of Japanese ethnographers visited Qiandongnan and published books with observations on Miao customs and dress that were similar to those found in ancient feudal Japan, thus popularizing the idea that the Miao and the Japanese have the same origins. Soon many Japanese tourists were coming to Qiandongnan to look for their roots.

Last but not least, the overemphasis of Miao culture is closely related to the political power of the Miao leaders at the provincial governmental level. During the initial and developmental stages of Guizhou ethnic tourism, top provincial leaders were from the Miao communities. For example, Chaowen Wang, a Miao man born in Qiandongnan Prefecture, served as Governor of Guizhou between 1983 and 1993. Zhengfu Wang, a

native Miao man from Kaili, served as the Vice-Governor between 1998 and 2006, before being replaced by Xiaokai Liu, a Taijiang Miao man who served between 2008 and 2012.[23] These Miao leaders used their vital decision-making power regarding the provincial economic and cultural development to prioritise Miao communities. Chaowen Wang actively promoted the academic research of Miao history, culture and medicines. He also planned to build a Miao historical theme park in Qiangdongnan (Wang, 2008). Xiaokai Liu focused on the balance between ethnic heritage preservation and tourism-oriented development in remote Miao villages, while promoting the ethnic tourism development of Eco-Museums in remote Miao villages (Liu, 2011). These powerful political Miao leaders have played a crucial role on the preferential development of Miao ethnic tourism in Guizhou.

It is evident that the Guizhou provincial government has paid more attention and put more resources in promoting Miao ethnic tourism in comparison with other ethnic groups living in Guizhou. This directly resulted in not only the rapid commercial development of Miao crafts, but also their dominant place in the Guizhou tourism commodity market.

In this chapter, I have explained the Miao as an ethnic group and their subsequent marginalisation in the People's Republic of China in the earlier periods of the development of the China as a nation. The rise of the modern national economy and the introduction of capitalism have transformed Miao lives, as many of their villages have

[23] All information of the leaders comes from http://www.gzgov.gov.cn/

become the target of ethnic tourism. New economic opportunities through the commodification of traditional embroidery have interacted with the growing patterns of rural-to-urban migration, which will be discussed in more detail in chapters 5 and 6.

In the next chapter, I will explain the traditional practice of Miao embroidery and the functions it served in Miao villages before the rise of ethnic tourism and the introduction of modern capitalism. Understanding how Miao women practiced embroidery in the past is essential if we are to appreciate the wide-ranging and irreversible impact its commodification has had on Miao village life and women's gender and ethnic identity.

Part 2

Chapter 4 Miao Embroidery as a Gendered Ethnic Practice

This chapter examines the traditional significance of women's embroidery for the Miao. Before Miao embroidery began to be commodified, it had long served important cultural and social functions in Miao villages. The practice of embroidery and the resulting textiles provided ways to express identity, helped pass on cultural inheritance and collective memory, and maintained the gender roles and gendered divisions of labour within communities. Miao women had simultaneously been proud producers of the coveted artifacts, guardians of local cultural practice, as well as being disciplined by heavily gendered societal roles and structures. An understanding of how Miao women practiced embroidery prior to the introduction of a capitalist economy into their villages is crucial in order to make sense of the social, economic and cultural changes that have resulted from the commodification of Miao embroidery in post-socialist China.

In the following chapter, I first explain how Miao embroidery embodies visual representations of gender, ethnic and social identities. I then subsequently examine how embroidery functions as a vehicle to construct ideals of femininity in Butterfly Village Miao communities. In the final section of the chapter, I focus on embroidery as an embodiment of Miao women's agency. Based on these discussions, I argue that embroidery was a form of 'double-edged sword' for the Miao women I encountered. On the one hand, it acted as a practice that enabled women's ongoing compliance with social and cultural expectations that maintain existing gender and social class

inequalities. On the other hand, however, many Miao women eagerly took part in the production of embroidered items for the many benefits it could bring, particularly economic benefits that can grant them new forms of power and status within their communities. The women were neither merely victims of oppressive tradition nor completely free agents. In between the tensions of these two extremes, they cultivated a space where embroideries were not the only things they created.

Miao Embroidery as Visual Representations of Identities

In this section, I will explain what roles embroidered clothes played in expressions of social identities in Butterfly Village, the main field site for this study. Embroidered clothes have been an important avenue for the Miao to distinguish their ethnic group and sub-ethnic groups from other groups. They further use clothing and embroidery to mark gender, age and social differences within their own Miao communities.

Anthropologist Terence Turner once wrote "Man is born naked but is everywhere in clothes" (Turner, 1980, p. 112). This statement strikes at the heart of anthropological research on clothing, which focuses largely on the roles and functions of dress for humans as social beings. Anthropology has contributed to studies of clothing by exploring garments as representations of social identities, including race and ethnicity, class, gender and age (Aspelund, 2011; Quizon, 2007; Hansen, 2004; Eicher, 1999; 2000). Turner thus aptly referred to clothing as "social skin" (1980, p. 83).

There has been a significant focus among anthropologists on clothing as symbolic representations of ethnic identity. Clothing worn by particular ethnic groups are often

referred to as “ethnic dress”, which “mark the ethnicity identity of an individual” (Eicher, 1999, p. 1) and “visually separates one group from another” (p. 300). Members of an ethnic group assert a unique identity on the basis of culturally distinctive elements, which not only include territory, religion, ancestry and language, but also ethnic dress as part of various processes of aesthetic distinction (Cohen, 2004). Clothing can serve not only a tool for one ethnic group to represent its own cultural identity, but also for other groups to recognise and assert their various perceived differences (Yang & Wall, 2014).

There is a notable history of visiting outsiders recording the dress styles of various ethnic groups throughout Guizhou province. For example, in the Kangxi period (1662 - 1722), one historical document has recorded that “Miao sub-groups have similar customs but different costumes” (Wang, 1891. As citied in X. F. Wu, 1990, p. 87). Another document contains a similar description: “Miao sub-groups are scattered over hill regions. One colour (of ethnic dress) represents one sub-group” (Huang, 1924. As citied in Yang, 1998, p. 37). Moreover, some other historical documents in the Qing Dynasty also distinguished Miao sub-groups based on ethnic dress styles, and named groups by the dominant colour of women’s outfits, such as “Red Miao”, “White Miao”, “Green Miao” and “Black Miao” (X. F. Wu, 1990, p. 87). These documents have profoundly influenced researchers. For example, Japanese anthropologist Torii Ryuzo wrote *Investigation Report of Miao Nationality* on the basis of his fieldwork in Miao villages in southwest China in 1905. He pointed out that: “Miao sub-groups are identified by their costumes’ colour and embroidery styles” (2009, pp. 30-31). Similarly, Chunsheng Ling, China’s first professional anthropologist, continued to use the historical classifications of Miao sub-groups. He distinguished 5 main Miao sub-groups

by the colours of women's dresses (1998). Wanxuan Yang has provided an astute observation regarding how Han scholars have identified and classified Miao sub-groups: "One is by geography, and another is by decoration." By decoration, he meant ethnic dresses (2009). Some anthropologists and historians have critiqued this approach to classifying Miao sub-groups, claiming it is less rigorous and lacks a strong theoretical foundation. However, this classificatory approach is still in use today among scholars, journalists and other non-Miao observers and commentators, reflecting both its historical use and also its convenience.

Importantly, Butterfly Miao themselves also rely on the styles and embroidery patterns of women's dresses to mark ethnic differences in relation to other Miao sub-groups and even other ethnic groups. A mythological tale exists in the form of a Miao oral history text that explains the origin of using different dress styles to identify different Miao sub-groups (Pan, 1990, pp. 202-203):

> At first, the Miao ethnic group had the same costume and embroidery style. When the whole group immigrated to a place named "Tiaoxi", they found that it was too crowded for everyone to live there. So they decided to separate into several groups and move into different places. But all of the groups had agreed that they would get together in Tiaoxi every 13 years. 13 years later, all sub-groups came back to Tiaoxi. When they were having a happy and harmonious dinner, an old Miao woman quarreled with another one about a young girl, both of them insisting that the young girl was their own granddaughter. Accidentally, one of them got killed by the other. Members of different groups realised the seriousness of the problem. They have decided that each group should have a unique costume and embroidery

style to readily distinguish each other's heritage and group membership, to avoid a similar tragedy in the future.

My Miao interlocutors in Butterfly Village continue the long-held tradition of using distinct dress styles to express their ethnic group identity. For example, when Zhengwen Yang, a Miao anthropologist, asked local Miao people to share their impressions of various different styles of Miao clothing represented within a picture album named *China's Miao Clothing*, they replied: "They are not our Miao clothes" (1998, p. 253). I heard similar responses during my fieldwork. When I showed Butterfly Miao people the pictures of embroidered clothes of nearby ethnic groups such as Buyi and Dong, and various other Miao sub-groups, most people responded with statements such as "they are beautiful, but not *our* Miao clothes." Some people provided a more detailed answer: "They are not *our Butterfly* Miao clothes." My Miao interlocutors thus frequently made a point of highlighting that *their* way of representing Miao female identity is different from those in the pictures. In this sense, it can be said that they 'wear' their ethnic identity.

For members of Butterfly Miao society, women's embroidered clothes represent not only their ethnic identity, but also other forms of identity such as gender, age and social class. The colours of embroidery express Miao women's marital status and age. The main colours used by Butterfly Miao embroiderers are red and blue, and various shades of these two colours are used to distinguish the status of the female wearers. Photo 4.1. and Table 4.1. below describe the corresponding age and marital status of Butterfly Miao women by thread colours.

Photo 4.1. Colourful threads used in Butterfly Miao embroidery.

Photo by author.

Table 4.1. Miao women's age and marital status by thread colour.[24]

Number	Colour	Age	Marital status
1	reddish orange	16-25	unmarried
2	brick red	16-35	married
3	sapphire blue	20-40	both unmarried and married
4	indigo	over 35	married
5	peacock blue	30-50	married
6	navy blue	over 50	married
7	black blue	over 60	married

[24] I drew this table on the basis of 20 interviews with 30 Butterfly Miao women and engagement in participant observation.

In general, women in Butterfly Village wear bright colours when young, and transition to wearing darker colours as they age. However, this is not a strictly fixed formula. For example, women of all ages can wear red for ceremonies. Also, if a woman is invited to dinner by another woman, the colour of the guest's embroidered clothes should be similar to that of the host, regardless of the guest's marital status. Women's age and marital status is further expressed by their hairstyle, silver jewellery and adornments. Even the choice of auxiliary thread colours indicates slight differences in women's ages. As Mingke Wang concludes: "Even a tiny difference in the design and pattern of women's costumes… can make a significant difference in local perspective" (1998, p. 844).

Furthermore, Miao embroidered clothes represent different social classes. Following Giddens (2006), I use the term social class to refer to the structural inequalities among social groups in terms of their access to economic, political and cultural resources. Although the division of Miao women into different social classes during the Maoist era has had significant political and historical implications[25], it has also reflected the disparity between the rich and the poor in Butterfly Miao society as a self-subsistent economy.

In Butterfly Village, the quality and quantity of embroidered clothes owned by Miao women signifies their family's economic status. Table 4.2. below shows Miao women's

[25] Mao Zedong wrote Analysis of the Classes in the Chinese Countryside in 1933. He divided villagers into five social classes based on their possession of cultivated land and the number of hired workers. The subsequent land reform (1950) was developed based this classification of social classes. See Mao Z (1956).

social class based on the possession of embroidered clothes within a 3 year period drawn from official data collected between 1956-1963 by the Guizhou Provincial Institute of Ethnology (2009). The difference between the first-class and the second-class embroidered clothes is the size of the embroidered sections on the clothes, and the number of the embroidered sections on each item.

Table 4.2. The possession of embroidered clothes by Miao women in different social classes.

Social Class	Number of first-class embroidered clothing items	Number of second-class embroidered clothing items	Number of clothing items with an embroidered decorative border	Total number of embroidered clothing items
Rich peasant	2～8	4～6	7～10	13～24
'Middle-strata'	1～2	3～5	5～7	9～14
Poor peasant	0	1～2	4～6	5～8

Resonating closely with this officially collected data, most Miao women of lower social classes I interviewed clearly remembered the feeling of owning an insufficient number of what they considered to be good quality embroidered clothes in the 1960s and 1970s. Some women mentioned that they felt embarrassed rather than happy at their own wedding because they could not wear an embroidered wedding dress. One woman said that her entire family owned only one embroidered dress, and the daughters always quarreled over who would get to wear it.

The primary reason why embroidered clothing indicates social class is the time it takes the women to produce embroidered clothing items. Embroidery is extremely time-consuming work, because the production process involves a complicated series of one dozen steps. In the preparatory stage, the process includes weaving and spinning, dying the fabric with natural materials, starching silk threads with honey locust, cutting the paper pattern and tailoring garments. In the embroidery stage, women use different stitches to make different embroidered pieces. Finally, they assemble and fix various pieces into different parts of the garment (see Photos below). Miao women are required to be very patient and meticulous in every step, as any small flaw may ruin the entire garment.

Photo 4.2. The front of Butterfly Embroidered attire.

Photo by author.

Photo 4.3. The back of Butterfly Embroidered attire.

Photo by author.

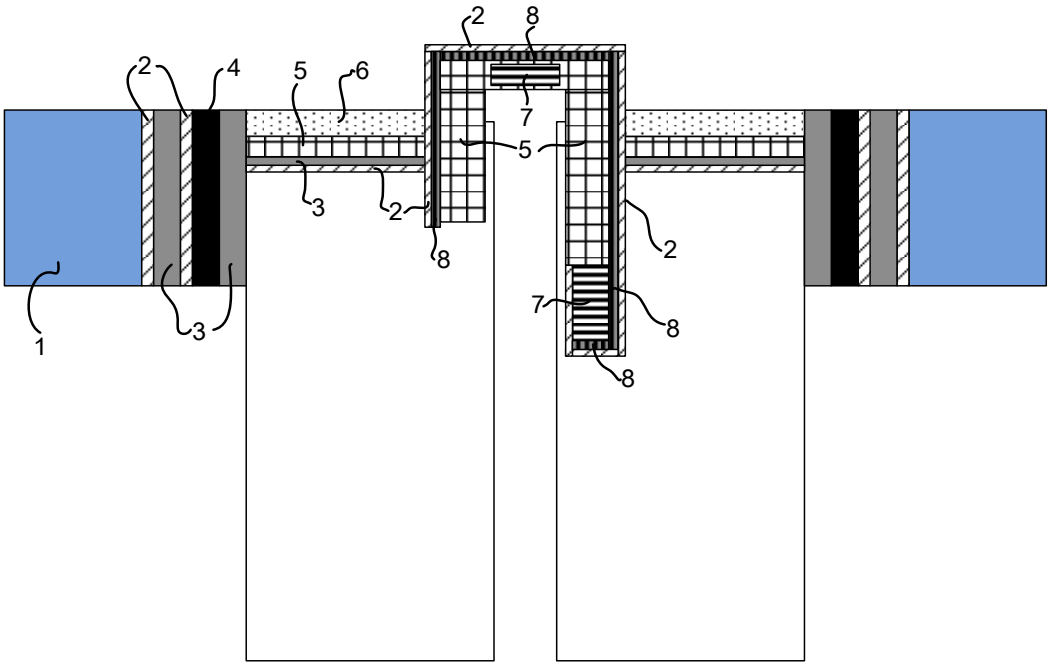

Photo 4.4. The structure of Butterfly embroidered attire.

Drawn by author.

Table 4.3. Embroidered sections of Butterfly Miao attire produced by author (photos by author).

	Part	**Embroidery Skill**	**Detailed Picture**
1	Cuff	Broken-thread stitch; Serging stitch	
2	Lace	Barbola	
3	Lace	Counted treads	
4	Upper sleeve	Broken-thread stitch; Serging Stitch	
5	Lace of shoulder	Weave	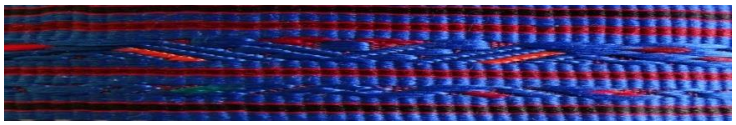
6	Shoulder	Broken-thread stitch; Serging Stitch	
7	Collar	Barbola	
8	Lace of collar	Pine needle stitch	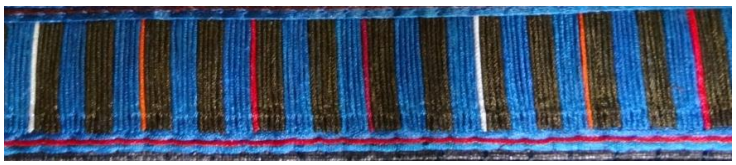

On average it takes Miao women two years to complete a set of embroidered attire, including a jacket and two aprons (front and back). Therefore, only those from wealthy families without the need to engage in intensive farm work and household chores have the time to make elaborate embroidery. In contrast, Miao women from poorer family backgrounds undertake heavy farm and household work for a living. As farm work occupies most of their waking time, there is little time left to embroider. For these women, it takes 8-10 years to complete a set of embroidered attire. In other words, the quantity and quality of embroidered clothing that a Miao woman possesses depends on their access to leisure time, which in turn depends on the family's economic status. The correlation between class and the relative availability of leisure time to dedicate to refined embroidery practices can be observed in many other societies. For example, crewel embroidery work is a "patent of nobility" in countryside New England, as those who are employed by others cannot afford the leisure time required to devote to this craft (Wheeler, 1921, p. 35). Similarly, in China during the Ming and Qing Dynasties (1368-1912), a Han woman's proficiency in embroidery skills and exquisite embroidery productions signified her wealthy family background (Bray, 1997, p. 268). Observing the emerging middle class in American society during the Industrial Revolution, Thorstein Veblen wrote *The Theory of the Leisure Class* (1899/2009). For him, the "leisure class" could be understood as the privileged wealthy elite who engaged in conspicuous consumption. Veblen maintained that such "non-productive consumption of time" (p. 33) indicated people's high social status due to their ability to afford a life of relative idleness. Veblen had also criticised the wearing of high heels, corsets and other impractical clothing items that were worn to signal the ability of the rich to avoid physical labour, which would necessitate more practical attire to allow for ease of movement (Bush, 1978). Although Veblen used the term "leisure class" to criticise the behaviour of this privileged class at a time when modern consumer culture

was emerging, his astute observations are relevant to Butterfly Village to the extent that wealthier Miao families have the means to display their class through the quantity, the quality and the styles of clothing items that they possess.

However, there is one significant difference between the leisure class of Veblen's time and wealthy Butterfly Miao women. While the former could purchase status items from department stores, the latter are required to make their own in their 'leisure time'. In the next section of this chapter, I transition from examining the relationship between embroidery and class, to observing the association between embroidery and Miao femininity.

The Social Construction of Femininity Through Miao Embroidery Practice

It has been widely understood that across diverse cultures and throughout much of history, the association of women with craft production has been deemed to be 'natural', as a somewhat innate skill that women are particularly adept at. For example, the Confucian dictum "Men plow, Women weave (*nan gen lü zhi*)" has long been used to explain the gender division of labour in China. In Australian high schools in the 1960s, embroidery was a compulsory course for girls as a preparation for women's domestic life after marriage (Wood, 2009). In nineteenth century England, British women embroidered to be feminine, and were feminine because they embroidered (Parker, 2010).

However, in the last few decades, a growing number of scholars have argued that

embroidery has not always been associated with women's work and notions of femininity. For example, in *The Subversive Stitch: Embroidery and the Making of the Feminine*, feminist Rozsika Parker (2010) has claimed that in medieval England, most professional embroiderers were men, and some workshops even limited women's participation in embroidery. At the same time, both men and women embroidered as a form of recreation (Parker, 2010). Similarly, anthropologist Marry Beaudry has found that in the 19th Century, some kindergartens in the United States provided "toy thimbles" for both boys and girls, with the aim of helping them "mold the characters" (2006, p. 176). Moreover, from the perspective of gender and technology, anthropologist Francesca Bray has examined the transformation of the textile industry during the Ming and Qing Dynasties in China (1997). As textile fabric was in demand in economically prosperous areas, men took to weaving alongside their wives in order to earn more money for the family. These research findings can support the argument that embroidery and its widespread associations with femininity are far from natural, but conversely are socially constructed.

Scholars have pointed out that embroidery has become feminised in many cultures as a way to enforce gender roles. Parker has viewed the socially constructed nature of embroidery-as-feminine as a way of subjugating women in patriarchy societies. Her central argument is that since the 16th century, teaching young women to embroider has been designed to "inculcate obedience, submission, passivity and virtue" in them (2010, p. 128), and that until the 19th Century, embroidery was seen as "evidence of the naturalness of femininity" (p. 189). The assertion that women should be feminine, submissive and patient has reinforced the social bias that women should be protected by men and be confined in a life of domesticity. In a similar fashion, though instead

focusing on women's embroidery in the Late Imperial China, Grace Fong explores how embroidery as a bodily discipline was understood to cultivate women's virtue and temperament. She describes how women embroidered at the time (2004, p. 60):

> Sitting for long hours at the embroidery stand or holding the embroidery loop, and looking closely at the evolving design as the fingers perform fine stitching on the surface. It is an activity that entails endless repetition.

Fong (2004) points out that embroidery is akin to a religious recitation. It is in the process of endless bodily repetition that women accumulate merits of concentration, patience and humility. In other words, women's learning and making of embroidery is not only for the skill acquisition and production, but also as a bodily and visual discipline to shape their femininity.

In Miao culture, too, textile work is not only an exclusively female craft, but also viewed as an embodied virtue of women. In Butterfly Village, learning and producing embroidery is a significant social expectation for Miao women. "You are good at embroidery" is the highest praise for a Miao woman, as this references her industriousness, dexterity and intelligence. Women's daily embroidery practices are viewed as a comprehensive measure of the extent to which they have attained Miao feminine ideals. During my fieldwork, I witnessed how Miao women's motivation to learn embroidery was not always purely out of interest, but also to avoid accusations of laziness. As the following account by a middle-aged Miao woman attests:

> Learning embroidery is hard and dull, as you must practice stitching repeatedly, only to move on to learning another skill. You still have to do some farm work and household chores, which consume a lot of your time and energy. I remember learning embroidery until 2am when I was young. I did care about what other people said about me. They would say I was lazy, which is a gravely negative judgment for us Miao women.

Another Miao woman in Butterfly Village was trying to teach her daughter embroidery, precisely to help her avoid such criticism:

> My daughter has complained to me that I am forcing her to learn embroidery. She thought it was because I don't want to make embroidered dresses for her or give mine to her. She is wrong. If she does not know how to embroider, people will laugh at how lazy she is. You see? It is about saving her face. As her mother, I must push her to learn it.

Rather than the desire to own exquisitely embroidered dresses, Miao women in Butterfly Village were more concerned overall with their gendered dignity and pride, which was measured by their industrious learning and production of embroidery. Learning embroidery, therefore, was not only about producing clothes as both practical and prized aesthetic items, but also about maintaining women's reputations.

Miao men shared the women's understandings that embroidery was a centrally

important practice for them. Almost all Butterfly Village men I conversed with supported their mother, wife and daughters in their embroidery activities. Because men do not wear embroidered clothes in Miao culture, material gain in the form of such clothes is not the reason for their support. Instead, they support the women's embroidery work because they, too, believe that being an industrious embroiderer is crucial for women's social standing. This is illustrated by one encounter I had during my fieldwork. One afternoon in late spring, I was in Fang Village in Butterfly Town, taking some pictures of Miao women's embroidered clothes. I saw a young Miao woman making embroidery at the front door of her house, so I asked whether it was convenient for her to show me her embroidered clothes. She readily invited me into her home. The living room looked very messy: there was rubbish on the ground, a table was full of dirty dishes, the air smelt dusty. Her husband was silently sitting in a chair, watching a show on the television. As the young Miao woman was showing me her embroidered clothes, I exclaimed: "You have twice as many embroidered clothes as other young women I have met!" Suddenly, her husband said excitedly and brightly: "She does nothing except embroidery." He smiled to his wife and continued: "She embroiders day and night, even though she has already made enough to wear. I am happy about that, because it means she is hardworking and energetic. I cannot live with a lazy woman." The young woman smiled somewhat shyly, and replied: "I keep myself busy all the time."

In Butterfly Miao society, a woman's ability to practice embroidery directly affects their marriage prospects. A widespread Miao proverb articulates this sentiment bluntly: "A young woman cannot find a husband if she does not know how to embroider." A similar caution appears in a story from Miao oral epics (Wu, Jin & Bender, 2012, p.

545)

The seventh sister was called Ad Died

So dull she couldn't chat with the boys,

And her hands not nimble enough to embroider.

Her mother grew very sad,

Wondering who would want to marry such a girl.

Later, she was sent to a Han family,

Who first used her as a maidservant,

Then she became the son's wife.

In this story, the Miao girl who cannot embroider faces two consequences: first, she lost her Miao identity by being "sent to a Han family". Secondly, her social status was degraded from spouse to maidservant. For Miao women, the proverb rather accurately portrays the widespread expectations of them within the village. When I asked young Miao girls the benefits of practicing embroidery, most of them immediately responded: "So I can find a good husband." A courtship custom practiced among the Butterfly Miao reinforces the importance of embroidery for women's desirability. When young Miao girls are invited by young Miao men, girls wear an embroidered baby carrier, in order to show off their embroidery skills to attract young men. Women's embroidery skills are fused with ideals of feminine charm, as well as being a key resource in the marriage market.

At this point, I would like to return to emphasise that making and wearing embroidered clothes is exclusively for Butterfly Miao women. Although Butterfly Miao men also have ethnic Miao clothing, it is more symbolic, and without the kind of status afforded to women's embroidery or the requirements of daily production that comes with it. Butterfly Miao men's ethnic clothing is much more inconspicuous, as it comprises of a colourfully woven belt dotted by a few silver pieces, in contrast to the women's elaborately decorated and embroidered dresses adorned by many ornate silver features. Furthermore, the men only wear their Miao clothing items occasionally, mostly at ceremonies and festivals. Otherwise, their daily attire consists of modern, mass produced clothing, such as plain pants and cotton T-shirts. In contrast, Butterfly Miao women wear their ethnic costumes frequently. This distinction was already observed in 1951, when Xiaotong Fei conducted fieldwork in Miao regions of east Guizhou: "Miao men's clothes are similar to Han men, while Miao women still retain traditional Miao dress … There is little Han influence on Miao women's clothes" (Fei, 2009, p. 4).

This phenomenon has further gained the attention of numerous contemporary anthropologists. For example, Louisa Schein considers this situation as signifying Miao men's self-objectification (2000). Both Miao men and Han men are dressed in suits, even as they enjoy and discuss Miao women's embroidered clothes as spectators of the women's performance at Miao festivals (Schein 2000, p. 159). Schein argues that Miao men relegate the 'traditional' (ie. Non-modern) Miao identity to the women, which results in alienation from their ethnic identity. Edward W. Said's concept of Orientalism refers to "a constellation of false assumptions underlying Western attitudes toward the Middle East" (1978, p. 95). Building on this, Schein (2000) employs the term "internal orientalism" to explain how Miao women have become the traditional Other to the

‘modern’ Miao men (p. 165). The greater role played by ethnic minority women in maintaining ethnic identity than their male counterparts was also pointed out by Wang Mingke’s research on the transformation of the Qiang women’s dress since the Qing Dynasty (1998), as well as the emergence of Uygurs “middle classes” during China’s economic transition (Mackerras, 1995). Meimei Shen (2012) contends that female members of an ethnic minority group are more likely to be given the role of ‘guardian’ of ethnic cultural tradition, while male members assimilate more into the ‘modern’ majority culture, which brings with it various political and economic resources. A fundamental outcome of these trends is that claims of the natural or innate connections between women, femininity and embroidery has justified the limited access that minority women have had to such resources.

In sum, embroidery can be understood as a ‘doubled-edged sword’ for women in Butterfly Village. On the one hand, this time-consuming and onerous duty deprives Miao women of energy and time for other activities. As Rozsika Parker points out: “the demand for women to practice domestic arts prevented them from doing anything else” (2010, p. 75). The expectations of Miao women to embroider has also constrained them within the domestic sphere, as embroidery is practiced at home, and child-rearing and household chores are primarily women’s jobs (in addition to farm work in most cases). Embroidery thus further reinforces the gendered division of labour in Butterfly Village. On the other hand, embroidery is also a source of women’s pride, dignity and confidence. Miao women’s gendered subjectivity is reflected in their embroidery activities. Embroidery is not only a means of restriction, but may also be a vehicle for women’s agency. In the next section, I elaborate on this argument, delving into the issue of embroidery as an expression of women’s agency.

Embroidery as an Embodiment of Miao Women's Agency

As mentioned above, Miao embroidery is an embodied gendered activity. In this section, I focus on the perspectives of Miao women, who view embroidery as a way of constructing their gendered ethnic identity. It is not an exaggeration to say that Miao women understand themselves to be 'made' through embroidery activities: the process of learning and making embroidery is a way of being/becoming "a Miao woman". Miao women also consider embroidery as a way to increase connectedness among women, and a vehicle to make sense of and express personal emotions.

My discussion of embroidery and Miao women's agency is inspired by the theory of Communities of Practice. My analysis of the interrelationship between Miao women's embodied embroidery practice and the construction of gender and ethnic identity builds on this theory, which combines the acquisition of skills with identity construction and social participation. The concept of Communities of Practice was first proposed by Jean Lave and Etienne Wenger in *Situated Learning: Legitimate Peripheral Participation* (1991), and then developed and elaborated in Etienne Wenger's *Communities of Practice: Learning, Meaning, and Identity* (1999). According to Wenger, the definition of community of practice is as follows (1999, p. 4):

> Groups of people who share a concern, a set of problems, or a passion about a topic, and who deepen their knowledge and expertise in this area by interacting on an ongoing basis … Over time, they develop a unique perspective on their topic as well as a body of common knowledge, practices and approaches. They also develop personal relationships and established ways of interacting. They may even develop

a common sense of identity. They become a community of practice.

At the core of this definition is the acquisition of skills and knowledge as situated in social contexts, rather than a cognitive development of the brain. Indeed, the idea of situated learning has largely emerged as a criticism of cognitive theory. For example, from the perspective of cognitive theory, school education is founded on students gaining knowledge through the continual stimulation of their brain nerves in a specific place (school). However, from the perspective of situated learning, school education is not only limited to acquiring knowledge, but is also viewed as an environment, or "domain" within which children learn "how to be a student". Situated in the social environment (school), students communicate with teachers and each other, obey the rules and regulations of the school, and observe the behaviour of other students. They gradually and collectively establish their student identity, and perform it in daily life. Learning "shapes not only what we do, but also who we are and how we interpret what we do" (Wenger, 1999, p. 4). According to the idea of the community of practice, identity formation and skill acquisition are interwoven with each other.

Furthermore, the theory of Communities of Practice maintains that identity construction as part of the process of learning occurs through "legitimate peripheral participation", which describes the enculturation of novices (Lave & Wenger, 1991). Broadly, the primary purpose of novices' participation is to learn concrete skills. However, in the interaction with a group of more experienced practitioners, a novice becomes influenced by their certain values and beliefs, behaviour patterns and aesthetic tastes. Gradually, the novice comes to feel a sense of belonging to this group, and becomes incorporated within this group's shared identity. Therefore, the novice transitions from

peripheral participation towards full participation, which signifies the change in his /her roles in the community: their position has changed from an apprentice to an expert through the acquisition of skills. As he/she has already become embedded in this community, the newly joining novices will then follow his/her lead. By becoming an expert, he/she comes to play a key role in maintaining the community by inheriting the group culture and practices, and teaching knowledge to other novices in order to continue the process.

Most importantly, Wenger does not limit the scope Communities of Practice theory to specific learning environments such as schools and workshops. In fact, many communities of practice exist in non-institutional contexts, where the teaching and learning of skills, cultural practices, values and behaviours are interwoven with daily life. In *Situated Learning: Legitimate Peripheral Participation* (1991), Lave and Wenger refer to the apprenticeships of Yucatec midwives as an example, explaining how a Yucatec girl becomes a midwife in the process of growing up (1991, pp. 64-69). The premise is that the girl grows up in a family where her mother and grandmother are midwives. Within this domestic circumstance, the girl's learning of specific knowledge and practices of midwifery occur in the context of her daily life. For example, regarding delivering a baby, the girl learns about the required items when she goes to market with her mother. She does routine and tedious jobs to help her sick or busy mother, thus learning various forms of practice around care and domestic organisation. After she herself has experienced giving birth, such an intense bodily experience helps her to understand the role of midwifery for other woman, as well as allowing her to appreciate the cultural significance of midwifery in Yucatec culture. The girl who eventually chooses to become a professional midwife not only does so because she likes the job,

but also because it is culturally significant career handed down along the family lines.

This is a key example to demonstrate how learning a skill is often a social and cultural practice embedded in daily life. It also shows that through the learning process, an individual establishes not only a professional identity, but also interconnectedness between his/her multiple social and cultural identities. The theory of the Communities of Practice provides a valuable analytical framework through which to examine Miao women's embroidery practice. Miao women engage in a shared embroidery practice in Butterfly Village society. In this community, they learn, teach and perfect their embroidery skills together. Since embroidery is partly about socially constructing feminine traits, Miao girls learn to be a woman in the process of making embroidery. Moreover, as a central part of Miao ethnic identity, Miao women also come to understand Miao culture and establish their Miao identity through learning embroidery.

Miao girls enter the community of embroiderers at a young age. Their learning journey is started with an extended period of observation – watching how their mother, grandmother, and sisters make embroidery. They gradually gain essential knowledge about this embodied skill, such as items needed for embroidery, functions of different needles and types of embroidery stitches. Moreover, by means of watching how the others embroider, especially the bodily activities under different conditions, e.g., the physical differences involved in embroidering different patterns, working under varying conditions of light and weather, and with different thickness of threads, the Miao girls store the bodily experience of others into their own minds and bodies as instructions in "cache memory" for their future use. As Ingold astutely noted, a novice "absorbs and assimilates the 'intrinsic rules' of the craft" (Ingold, 2000, p. 356).

When Miao girls reach around 9-10 years of age, their mothers will start asking them to help with small embroidery tasks, such as arranging silk threads, threading the needle and sewing the end of the fabric. Their mothers will give them oral instructions and personal demonstrations. During this period, they will also start to practice simple stitches by using fabric scraps. Although they call this practice "embroidery for fun", it is a vital training for them to apply knowledge accumulated through watching to doing. This is what Ingold called "getting the feel", referring to the process of converting internalised rules to manifested practice (Ingold, 2000, p. 387).

In the initial stage of practice, the reaction of the body is rigid and slow. With more and more practice, the coordination among hands, arms, shoulders, eyes and other relevant body parts improves. By the time they reach 13-14 years of age, most Miao girls have gained what can be understood as a "habitual body" (Merleau-Ponty, 1962/2006, p. 101), in which past experiences of observing others and their own personal bodily experiences combine and synthesise. This bodily change is also reflected in the quality of their embroidery productions. When they first start to practice embroidery, there are a lot of blanks between stitches, and the surface looks uneven, unsmooth and irregular. As they gain more experience, they come to easily control the tightness of thread, and adjust gestures based on material and stitch type. Some of the embroidery pieces of these young women reach a high standard, where the thread is stitched in such a dense and even manner that it displays rich vibrant colours, gloss and shine.

As Miao girls become more proficient as embroiderers, they begin to develop a professional pride worthy of budding experts in the 'community of practice'. On a few occasions, I managed to irritate Miao women by failing to adequately grasp or

acknowledge the aesthetic and creative importance of their work. One day, I was closely observing my interlocutor Xia as she prepared to embroider. She stitched a paper over the embroidered fabric, then uncovered a palm-sized section of it where she planned to add more stitches. After that, she washed and dried her hands. Finally, she sat in a wooden chair, ready to start embroidering. I said to her: "You did these preparations to keep the embroidered surface clean, right?" She nodded. I then asked what I thought was a simple question: "You will finally wear the embroidered jacket when it is ready. If you accidently dirty it, how will you wash it?" She looked at me disapprovingly and asked pointedly: "Tell me, how would you wash a painting?" She then turned away without a word, and stopped talking to me. My understanding was that Xia was annoyed because my question implied that I thought of embroidery as a skilled craft work, aiming to produce practical and functional items of clothing. However, Xia likened the embroidered piece of fabric to a painting, highlighting its artistic nature and aesthetic importance.

In Western culture, women's embroidery production is frequently classified as a 'craft'. This classification is based on the distinction between art and craft, as well as the unequal gendered power embodied in this distinction. For example, painting and sculpture are often classified into the category of art, while weaving, woodcarving and pottery belong to the category of craft (Markowitz, 1994). The main basis of this designation is that although both art and craft have aesthetic attributes, craft also has practical functions (Danto, 1981). On the one hand, the production of artwork aims to create a unique style as a visual representation of personal thoughts and emotions. On the other hand, making a craft mostly follows a set of rules (skill, design and material) inherited through generations, which emphasises its collective nature. It has been

argued that the ascription of embroidery to crafts is also due to the fact that it is practiced primarily by women. As I discussed earlier, embroidery has been used as a way to cultivate women's femininity in many patriarchy societies. Women's engagement in embroidery is thus considered to be a means of displaying and performing their feminine identity, rather than as an expression of artistic agency (Parker & Pollock, 2013). Therefore, the labelling of women's domestic embroidery production as a craft stems not from the design or the pattern of embroidery itself but the gender power inequalities within Western patriarchal societies. However, in Chinese history, there is no distinct boundary between art and craft. From the etymological point of view, the term "art (*yi*) " means "planting by hands", emphasising the craftsmanship involved (Peng, 2013). Moreover, women's embroidery was at times viewed as an artistic endeavour. In Ming and Qing Dynasties (1368-1800), women's embroidery production entered into art markets, where it was appreciated and collected by male elites as artwork (Ko, 1995). Women's domestic embroidery practice has therefore had a history of being valued as an artistic creation, gaining recognition within the context of Chinese patriarchy. Through my rather tense interaction with Xia as described above, I learned that she was part of this history.

As Miao girls progress from peripheral participation in the community of practice towards full participation, they also learn subtle ways of perceiving and representing nature, which they express by using elaborate colours. There are two outstanding characteristics of Butterfly Miao embroidery compared to the styles of embroidery in other Miao communities within Guizhou. The first characteristic, as I mentioned earlier, is the complicated stitches requiring highly developed skills. The second characteristic is the particularly vibrant colours of their embroidery. Generally speaking, clothes

embroidered by the Butterfly Miao consist of eight to nine main colours, which are used to differentiate Miao women's age and marriage status, as explained earlier in this chapter. Apart from these dominant colours, there are more than 100 additional decorative colours. I was impressed by two types of stalls while conducting participant observation in the Butterfly Market, which demonstrated to me Butterfly women's obsession with choosing and matching colours in the process of making embroideries.

The first type of stall sold colourful silk threads. One seller, a middle-aged Miao woman, told me: "We imported silk threads from Suzhou, the most prosperous silk thread market in China. We don't have choice but find the best available threads, because our Butterfly women are so picky. I once tried to import silk threads from a nearby city instead, but no one bought them. They thought the colours were inadequate." Another type of stall sold detailed photos of embroidered parts of clothes. At first, I thought these photos were souvenirs for tourists. I found out later that these were popular among Miao women, who treated these photos as samples and style guides to inspire ideas for colours and patterns.

From the perspective of Miao women, both beautifully coloured threads and photos of embroideries provide support and inspiration for them to express precisely their observations and perceptions of nature. Butterfly embroideries often have similar patterns to plants and animals because many Miao women use the same paper cuttings as design patterns. However, their uses of colours are dramatically different, based on individual interpretations of the natural world. For example, when embroidering a cockscomb flower, one woman interwove white and red threads, as she tried to present a cockscomb, a popular flower motif, under the summer sunlight. Another woman used

orange at the top, which she observed was light, even transparent. Miao women I encountered paid great attention to their natural environment, which serves as an enormous source of inspiration that they vigorously reproduce through embroidery. This connection between nature and Miao art/craft is something the women learn as members of the embroidery community of practice. Through embroidery, they learn to perceive the world that surrounds them.

Much of the literature that examines women's weaving and embroidery elsewhere focuses on the role of making embroidery in each other's company, as well as that of gift-giving embroidery to increase group cohesion. For example, in the 19th Century, women in the United States sent quilts to each other to improve emotional ties between the marker and the receiver (Pristash , 2009). Similarly, in the Qing Dynasty, women in Southern China would gather in groups to embroider together, which enhanced their friendship and kinship ties (Ko, 1995). These findings indicate that women have used embroidery practices across time and space to establish and maintain homosociality in a patriarchal social context.

In Butterfly Miao society, women's embroidery practice often serves to strengthen emotional ties between maternal relatives. When Miao women talked to me about their experiences of learning and making embroidery in their natal family, their faces frequently lit up:

> Mother didn't speak much to me, as she was always busy doing farm work and getting chores done. But when she taught me embroidery, she became a good talker.

> She told me how her grandmother taught her embroidery, and made her favourite embroidered clothes. That was the most joyful time in my life. (Yang Ling, aged 42)

> At the beginning of learning embroidery, our four sisters strictly followed mother's instruction. As we made improvements over time, we began to point out mother's weaknesses in some skill areas. Mother always pretended to be angry when, in fact, she felt embarrassed. (Yang Jingxiao, aged 37)

> Before I got married, I was so anxious as I had not finished making my embroidered attire yet. My mother and two younger sisters helped me finish it. Sometimes, they only slept for two or three hours a day. When I wore the dress on the wedding day, my mother and sisters were very excited, and repeatedly said that I looked beautiful in the embroidered dress. I didn't sell it, because it's very important to me. (Pan Yan, aged 46)

The above narratives show how embroidery practice is an important vehicle through which Miao women can express emotions. It establishes a communication channel between the mother and the daughter; girls 'challenged' their mother's authority by discussing their embroidery skills; maternal relatives expressed their blessings to the bride through making an embroidered wedding dress. In these situations, embroideries signify precious, priceless love and memories, and these spiritually and emotionally important moments arise from women's daily embroidery practice and its collective

nature.

In addition to strengthening family relations, making embroidery can also be a way to strengthen friendship between Miao women. If a Butterfly Miao woman says: “We make embroidery together”, this means “we are good friends”. During my fieldwork, scenes of three or four women chatting and embroidering under the shade in front of a house were a common sight. When I inquired with them about the attraction of embroidering together, many Miao women responded similarly. They enjoyed the lively atmosphere of getting together, while also learning skills from each other, discussing ideas for colour choices, and borrowing each other’s wisdom to solve technical problems. According to the theory of Communities of Practice, mutual engagement, joint enterprise and shared repertoires are three key factors that contribute to the cohesion of the community (Wenger, 1999).

Importantly, the Miao women’s community of embroidery practice is organised and run by Butterfly Miao women themselves. They define embroidery as art as well as a ethnic practice that has continued for generations. They insist on only using the highest quality threads, and develop and exercise heightened creativity in their choice of patterns, especially regarding colour-choice to express the natural world around them in their own unique ways. Through embroidery, they develop pride in their art/craft, and in their roles as the bearers of Miao ethnic culture. They cherish embroidery as a family tradition, and see great meaning in the interactions among female members of the extended family through this practice. They laugh, cry, tease each other, remember the past and talk about the future as they embroider together in the present. In other words, in their community of practice, they use embroidery to exercise their agency and

express self-determination. For Butterfly Miao women, embroidery is not only about the moral construction of ideal femininity and the social and cultural pressure to submit to it, but it also expands women's self-chosen means of expressing individual creativity. Miao women are "writing with thread" (Harrell, 2009, p. 99), transforming themselves by using their community of practice as a "powerful rhetorical space" even as they continue and preserve centuries-old ethnic practice.

In this chapter, I have examined Miao women's embroidery as an ethnic practice, and its multifaceted social, cultural and personal significance. I have explained how embroidered clothing stands as visual representations of ethnic group membership, the wearer's age, marital status, social class and their desirability as a wife. I have also examined how embroidery as women's duty has organised the gendered division of labour, serving as an important criterion to assess women's femininity and thus operating as a social tool to inculcate obedience and feminine virtue. At the same time, I highlighted the empowering aspects of embroidery for Butterfly Miao women, who create their own community of practice in which they learn not only technical skills of creating embroideries, but also how to be Miao women as inheritors of ethnic cultural tradition and identity, and collective memory at the levels of friendships, families, neighbourhoods, villages and beyond. Comprehending how embroidery has been practiced and understood by the Miao themselves since long before the introduction of the cash economy in Miao villages is crucial for making sense of the transformation of these communities and subsequent commodification of Miao embroidery. The next chapter will investigate the process of this transformation.

Chapter 5 The Commodification of Miao Embroidery in Butterfly Village

In this chapter, I examine the transformation of Miao embroidery from an uncommodified ethnic practice to a commodity form within the contemporary Chinese market economy. Between the 1980s and 1990s, embroidery experienced some tremendous changes in terms of its economic roles, social functions and cultural meanings within Miao communities. As stated by Appadurai, an object only becomes a commodity under a certain set of circumstances, as various social factors jointly "define the exchangeability of things" (1988, p. 14). Drawing on this understanding, this chapter analyses the social, cultural and economic contexts that have led Miao embroidery to become a coveted commodity.

Within the 1980s and 1990s, the commodification process brought new economic and social opportunities to the village, transforming relationships among and between Miao women, the Chinese government, ethnic art collectors and tourists in the process. Through these tremendous transformations, tensions also emerged within Miao villages, regarding diverse opinions on how to best develop a commercial sector out of embroidery, as well as how to protect traditional aspects of embroidery as an ethnic practice. Miao women as bearers of this traditional practice played crucial roles in the rapidly changing local economy and its globalisation, both as producers and marketers of their embroideries.

The Early Commodification of Miao Embroidery and the Emergence of the Market Economy in Butterfly Village in the 1980s

The Guizhou provincial government began promoting domestic and international tourism of the province in the early 1980s. The government's interests in developing a provincial tourism industry were manifold. It sought to develop opportunities for trade, foster cultural exchanges with other provinces and beyond China, and develop the economy of the province overall (Oakes, 2005, p. 1). Guizhou Province was one of the poorest in the country at the time, and the government was keen to change its stigmatised image as a 'backward', marginal part of the country. After following decade and a half, in the mid-1990s the Guizhou provincial government developed an appreciation for the 'value' that ethnic tourism could also bring to the region. Developing ethnic tourism is a common strategy of provincial governments with a higher proportion of ethnic minorities within the population, such as in Yunnan, Guangxi and Hunan provinces. From official perspectives, promoting local distinctiveness not only attracts tourists and investors, but also "enhance[s] links between local traditional and nationalism" (Yang & Wall, 2008, p. 760).

The attitude of Guizhou's provincial government towards ethnic minorities in the province was contradictory. On the one hand, preserving their traditional ways of being was important, as tourists could enjoy ethnic minority culture as 'exotic' cultural experiences. On the other hand, the dominant and increasingly powerful Han ethnic majority have long viewed ethnic minorities in this province as 'backward' and therefore in need of modernisation, both in terms of their mindset and the ways that they organised their economy and society. For example, Miao is classified as "a

primitive communal society" within the seminal Chinese ethnic classification project (*minzu shibie*) of the 1950s. The official investigation team believed that the Miao were in an "early civilisation" stage of development, due to their subsistence economy, the existence of communal lands, and the absence of merchants and full-time craftsman (Diamond, 1995, p. 109). Geographer Tim Oakes aptly describes the central Chinese government's goals regarding ethnic minority populations during this period as: "change and improvement toward more civilised, elite forms ... the attainment of literacy, an education in science and technology, understanding of modern commerce, expertise in enterprise management, and even an entrepreneurial spirit'' (Oakes, 2005, p. 136). In line with the central government's policies at the time, tourism was considered a tool for the Guizhou government to 'perform' openness to the 'outside' world, as well as modernising village economies and alleviate rural poverty simultaneously. The key to achieving these goals, according to the state and provincial governments, was to transform ethnic minorities into capitalist entrepreneurs and incorporate them into the rapidly developing, tourism-led market economy of contemporary China.

Miao villages became prime targets of efforts to promote ethnic tourism in Guizhou for a number of reasons. Key factors ranged from the Miao being the largest ethnic minority in the prefecture; the presence of influential Miao senior administrators at the Prefectural level; to the cultural diversity within and between Miao communities, and the specific aesthetics of their crafts, both of which widely appealed to tourists. With full state backing, ethnic tourism flourished in Miao villages in Guizhou, which subsequently transformed the lives of Miao women and their embroidery practices.

The commodification of Miao embroidery started in earnest in Butterfly Village between the mid-to-late 1980s. The following interview excerpt from my interlocutor Meimei vividly recounts her first encounter with an outsider who was interested in her embroidery at a Miao festival in Butterfly Village:

> It happened in 1985 or 1986. I was dressed up for a dance at the Sisters Festival (*Zimei Jie*). I wore a red embroidered jacket, which took me three years to make. When I arrived in the biggest square in our town, it was crowded with people. I felt excited but also shy, as a lot of outsiders were watching us. What surprised me most was a man with yellow hair and blue eyes. I remember we looked at each other curiously. In the meantime, he kept taking photos of me, and this made me a little bit nervous. After a couple of hours, I went back home for dinner. When I had just started to eat, I heard someone knock on the door. It was the foreigner and his translator, a Han man. They enthusiastically praised my embroidered jacket. The foreigner said that he had never seen such beautiful and special embroidery, and that was why he couldn't help taking a lot of pictures earlier. To my surprise, he asked me whether I was willing to sell the jacket to him, and at once took 400 *yuan* (AU$80) out of his wallet. I hesitated for a long time. I was wondering: only Miao need embroidered clothing, what would the use of it be for a foreign man! Besides, I had never sold my embroidered jacket to anyone, so I was concerned what other Miao people would think. But my family was impoverished back then: poor harvest conditions continued to plague our town; both my son and mother-in-law were sick. I was desperate for money to buy medicine and food. I was reluctant to sell that jacket, but I felt I had no choice. I comforted myself with the thought that I could make another embroidered jacket once our lives had improved. Finally, I gave the

jacket to the foreigner and got 400 *yuan* (AU$80) in return. That was a huge amount of money, which equaled to two years of cash income of my family.

This vignette illustrates the key factors that gave rise to the commodification of Miao embroidery: the success of ethnic tourism in Miao villages during the 1980s; the recognition and appreciation of the aesthetic value and skilled artistry of Miao embroidery by foreigners; and Miao women's desires to earn money to improve their living conditions and lift themselves out of poverty. In the following section, I shall explore these three factors in greater detail, in order to illuminate how they each contributed to the commodification of Miao embroidery.

Collectors of Miao Embroidery and Their Aesthetic Tastes

Studies of the commodification of ethnic crafts frequently focus on the buyers' values and their impacts on ethnic arts and crafts. For example, June Nash researched Native American arts in the world art market, and found that the buyers' perceptions of, and appreciation of what they considered to be 'unique' cultural patterns, designs and production techniques impacted the popularity of particular arts (1993b.). Similarly, Eric Cohen found that a more traditional style of Hmong weaving in Thailand had experienced a revival due to European collectors' preferences (2000). Conversely, the crafts of Mi' gamw (a native group in Southeastern Canada) had become unsalable in world markets after their designs were altered to include new contemporary styles (Gray, 1999). The commercial values of ethnic crafts are largely determined by outsiders' desires and market trends. That is, one main driver of the commodification

of ethnic crafts was the combination of Western consumerist desire for traditional ethnic artefacts and handmade commodities (Cook, 1993).

Buyers of Miao embroidery consisted of domestic and foreign folk art collectors, public and private museums and merchants specialising in cultural artefacts. In the 1980s, most buyers viewed Miao embroidery as a visual representation of Miao culture, and emphasised its cultural value. For example, Xianyang Zeng (a Han Chinese man) is recognised as one of the first private collectors of Miao embroidery, and his aesthetic tastes widely influenced other foreign folk art collectors and merchants within this period. Zeng's interest in Miao embroidery arose from "an artist's sensitivity to beautiful objects" (Zeng, 2005, p. 35). Trained as a professional photographer, he began taking photographs of Miao embroidery in Guizhou during the 1970s. In the late 1970s, he discovered a common pattern in the Miao embroidery found within the region of Butterfly Village that was similar to the Taoist yin-yang symbol. This discovery allowed Zeng to realise that Miao embroidery was not only aesthetically valuable, but also a significant cultural symbol of the Miao ethnic group. This "discovery" led him to begin collecting Miao embroidery from different Miao sub-ethnic groups in Guizhou, with a particular penchant for items made before the founding of the PRC in 1949. Zeng believed that the relatively "isolated" nature of Miao ethnic groups prior to the Maoist period allowed the preservation of more "traditional" patterns and designs of Miao embroidery, which he particularly valued and referred to as "a cultural symbol of ancient Miao" (Zeng, 2005, p. 36). Thus, exploring the cosmological and cultural symbolism and history embodied in patterns of Miao embroidery had become the focus of his career as a collector. As Zeng revealed, the butterfly represented Miao people's ancestors; the sun was worshipped in Miao religion; birds and fish implied mating and

fertility. For Zeng, Miao embroidery was a “living fossil” of ancient Miao culture, which represented various cultural meanings in the design.

Zeng’s understandings of Miao embroidery and its value was commonly shared among collectors in the 1980s, who flocked to remote Miao regions in Guizhou to hunt for “antique” Miao embroidery which was handed down from generation to generation. They referred to this type of embroidery as “old Miao clothes” (*gu miaoyi,*), and heavily promoted it at exhibitions. For example, Huang Yingfeng, a private collector from Taiwan whom I became acquainted with during my fieldwork, had been collecting Miao embroidery since 1991. He had hosted numerous exhibitions of Miao ethnic clothes around the world with the tagline “old Miao embroidered clothes made 100 years ago”. Similarly, Wu, a Han merchant that I spoke with, valued the Miao “old clothes” highly at his exhibitions, pricing it ten-times higher than contemporary embroideries. Such antique Miao embroideries have remained precious collectors’ items to this day. The archaeological significance of Miao embroidery equates to its collectability as an ‘antique’. Collectors’ preferences for antique Miao clothing is based on the high value placed on the supposed timelessness of Miao ethnic tradition. This resonates with anthropological studies of perceptions of “authentic” ethnic crafts in other contexts (Bendix, 2009; Grijp, 2009; Cornet, 1975; Boas, 1955). Although Butterfly Village is now entangled with the global market through their outwardly-focused embroidery industry, these old, inherited embroideries are still widely considered to have originated from “a world of the unspoiled, pre-contact ‘natives’ who live in another time than our own” (Shiner, 1994, p. 225). A Butterfly Miao woman aptly expressed the significant shift in appreciation and value of Miao embroidery within the 1980s, which also reflects the widespread awareness among the women in

the village more broadly: “Prior to the 1980s, old embroidery was like scrap papers scattered on the ground. After the 1980s, old embroidery was under lock and key as everyone knew its value.”

Apart from Miao embroidery’s perceived archaeological significance, the collectable value also relates to its aesthetic qualities. Generally, collectors derive aesthetic value from exquisite skills and vivid designs. For some, this value relates to art education and research. For example, Hu Feng, a Professor in the China Academy of Art told me during our encounter in Butterfly Village that academic scholars of fine arts have purchased Miao embroidery to use as teaching materials in order to inspire students’ creativity with composition and colour matching. A few Japanese collectors have also bought collections of Miao clothes in order to research embroidery stitching skills. In other contexts, Miao embroidery is considered valuable as a kind of folk art, which affects collectors’ choices in distinct ways. In my interviews with curators of public museums in Guizhou and other provinces, they all favoured collecting and exhibiting Miao embroidery that has ‘painting-like’ qualities, as they believe that it has a greater visual impact on viewers, as they can immediately appreciate its beauty. The curator of Guizhou Provincial Museum articulated this perspective bluntly: “The public do not have specialised knowledge to appreciate the symbolic meaning of Miao embroidery. They came to the museum to see exotic and beautiful Miao embroidery, just like what they see printed on postcards or in photobooks”. The museum’s selection standard homogenises diverse Miao embroidery to a fixed, official and readily promotable and consumable form of ethnic craft by selectively highlighting and even exaggerating the exoticism of ethnic cultures that panders to what officials understand as tourists’ tastes. Therefore, the official stance is “mass tourists are not anthropologists who seek a

textured understanding of another culture; rather, they often want a formula of an abbreviated culture" (Leong, 1997, p. 93). Such an attitude of museum curators encourages collectors and tourists to focus on the most 'noticeable', figurative aesthetic aspects of Miao embroidery rather than the complex techniques involved in the production. In this sense, the tastes of both collectors and tourists are shaped by policies and views of powerful authority figures as much as by their own interests and values.

In the early 1980s, Miao embroidery was still viewed as a collectable folk art rather than as the global tourist commodity that it has become today. The early development of tourism had brought domestic and foreign art collectors and researchers in search of Miao embroidery to remote Miao regions of Guizhou. As a folk art, the value of Miao embroidery had long been estimated by its symbolic meaning, the age and aesthetic qualities produced by exquisite artistry and colourful designs. Butterfly Miao embroideries contained all of the right elements to meet consumer's desires and expectations of folk art, thus becoming one of the most popular commodities in global as well as domestic art markets. This applied particularly to embroidery pieces that were considered antique: produced by complex skills, using vivid patterns and handed down by generations of Miao women.

The Village Leaders and Their Influence on the Development of Ethnic Tourism

Many studies have emphasised the significance of local leaders in rural tourism development (Haven-Tang & Jones, 2012; Davies, 2011; Aref & Redzuan, 2009;

Simpson, 2009; Wilson, et al., 2001). A strong local leadership contributes to community cooperation (Mitchell & Reid, 2001), the distribution of economic benefits (Pearce, 1992), local control of tourism resources (Ying & Zhou, 2007) and partnerships between various actors (Verbole, 2000). However, as a top-down decision-making structure dominates ethnic tourism development in China, village governments at the lowest tier of the administration have limited power and influence (Yang & Wall, 2014). Therefore, as Li et al observe (2016, pp.249-250), "the role of village leaders in most rural Chinese communities almost always focuses on conveying the message from government to residents".

Even so, it must be recognised that Butterfly village leaders have played some role in the local ethnic tourism development and the promotion of Miao embroidery. First, they encouraged villagers to view ethnic tourism as a source of earnings to supplement agriculture and other means of generating income. The village started its ethnic tourism project in the 1980s. At first, some Miao women thought it was not appropriate to show tourists their ceremonies, rituals and other traditional customs. They also felt annoyed with frequently wearing embroidered attire, taking pictures with tourists and showing them vintage embroideries day in day out. According to my embroidery master Shuou, the former village head and the village secretary—both of who were Miao men—successfully persuaded the women and encouraged them to "seize the moneymaking opportunity" and become active promoters of Miao ethnic tourism. Since the late 1980s, Butterfly village began to charge admission fees for ceremonial and ritual sites. With the approval from the villagers, the village leaders allocated 20% of the tourism revenue to upgrade basic infrastructures, while the other 80% was equally distributed to all participants of the ceremonies and rituals. In other words, the leaders encouraged

villagers to “adopt a new ‘commercial conscience’ and developed a “systematic means of earning a tourist income” in the initial stage of local ethnic tourism (Oakes, 1998, p. 178).

Second, the village leaders highlighted the importance of hospitality for collectors who flocked to Butterfly village in search of Miao embroider. As one village woman recalled: “They (the village leaders) thought it was really nice that outsiders were willing to pay a lot of money to buy our embroidery. It meant they like our Miao culture, so we should give them a very warm welcome.” The leaders and Miao women often took collectors on a tour around the village, invited them to dinner and gave them local delicacies. These measures encouraged collectors to build good relationships with villagers and further support the commercial development of Miao embroidery in the following decades. Some collectors revisited Butterfly village and bought more embroidery pieces; others introduced Miao women to new buyers; yes others brought in NGO projects to encourage young girls to learn embroidery; some introduced outside investors and designers who were interested in incorporating elements of Miao embroidery into modern fashion by cooperating with the Butterfly embroidery ‘industry’. All these wealthy and influential actors also received warm hospitality in the village. Certainly, the main drawcard of Butterfly village was the quality of its Miao embroidery, without which the collaborative relationship between collectors and Miao women would not have developed let alone sustained. However, the harmonious relationship between ‘hosts and guests’ created a friendly environment, which helped conveyed the image that Butterfly village residents actively accommodated visitors to jointly shape the local ethnic crafts industry.

As shown above, Butterfly Village improved the effectiveness of its collective performance as willing participants in the new trade to ensure their control over tourism resources. Butterfly Village residents learned to cooperate with each other and outsiders under the guidance of village leaders. The village leaders' active role has been enabled by other powerful actors' engagement in local tourism development, and the provincial government's plan to turn Butterfly village into an ideal site to display Miao cultural and promote the consumption of ethnic handicrafts.

Miao Women's Participation in Selling Old Miao Embroideries

Existing studies have found that women often participate in selling the ethnic crafts that they produce, in order to increase their income and support their families. Stephen Lynn explains that in response to the increasing demand for traditional Mexican weaving in the global market, women in the Mexican village of Teotitlán del Valle sought to improve their material living conditions by producing and selling their weavings, as well as promoting their products to increase their popularity in the market (Stephen, 2005). In another example, June Nash discusses how women in the state of Oaxaca, Mexico eased family debts through making and selling Indian-style pottery (1993a). Similarly, the Butterfly Miao women that I interviewed ascribed- without exception- their original reason for beginning to sell their embroidery to the extreme poverty that they suffered from at the time. The widespread poverty in ethnic regions of Guizhou was thus a fundamental driving force behind the swift rise of Miao embroidery as a commodity item in the 1980s.

The poverty of Butterfly Village in the 1980s was caused largely by natural disasters and their impact on agriculture, which had dominated Butterfly Village's economy, providing a livelihood to more than 90% of the population (Taijiang County Annals Compilation Committee, 1994). After the early 1980s, Taijiang County (where Butterfly Village is located) experienced droughts and damages to crops by frost and plagues of locust. The local chronicles recorded the events as follows: "1982, heavy drought; 1983, more than 50% of cultivated land was damaged by a plague; 1984, frost damage severely affected the production of rice; 1985, 90% of cultivated land was damaged by insects and rats; 1986, most crops were damaged by frost" (Taijiang County Annals Compilation Committee, 1994, p. 88). These natural disasters caused severe loss of livelihood leading to starvation, and the spread of diseases among most Miao families. Leaving the village for cities to earn a living as unskilled labourers was not yet common among the Butterfly Miao at the time, despite the fact that the restrictions of the Chinese household registration system (*hukou*) had eased during this period to allow for more rural-to-urban labour migration[26] (Afridi et al., 2015) (For an explanation of the history of Chinese household registration (Hukou) system please see Chapter 3: Background). This was the context in which Butterfly Miao women had begun selling their embroideries in the 1980s, as a vital source of income and means of survival. In a matter of just a few years, more than 80% of Butterfly Miao women had engaged in the business of selling Miao embroidery. According to Pao, a local Butterfly Miao woman who started to sell her embroidery in the late 1980s, the only women who refrained from selling their work at the time where those who had only one set of embroidered attire, or none at all.

[26] For an explanation of the history of Chinese household registration (Hukou) system please see Chapter 3.

Interestingly, more than half of Butterfly Miao women have continued to sell their embroideries even after their living conditions improved. This is partly because their earlier experiences had taught them about the commercial values of their cultural practice. One Butterfly Miao woman explained: “They (visitors) came to our village and spent money on eating our simple food, sleeping in our humble wooden houses, and buying our old objects. We earned money quickly and easily”. The increased earning power as well as the penetration of Butterfly Village by the outside world had created a ‘hunger’ among Butterfly Miao people for more affluent lifestyles. A similar phenomenon has been observed in various other Miao regions throughout Guizhou since China’s economic reform. For example, anthropologist Louisa Schein explored the reproduction of Miao identity and culture in Xijiang Miao Village in Guizhou in the 1980s (2000). In her insightful ethnography, Miao people were depicted as eager to purchase goods that were popular in China’s urban centres, as they viewed this consumption as a way to progress beyond their supposed backwardness and acquire a modern Miao identity (Schein, 2000, pp. 262-265). During my fieldwork, I also witnessed Butterfly Miao people’s aspirations for what they understood to be a ‘modern’, ‘urban’ identity, and how it was partly embodied in their pursuit of commercial goods such as candy, electric flashlights and sneakers.

Moreover, Butterfly Miao women had developed confidence in their embroidery skills by being able to produce sought-after commodities. This is reflected in the words of a Miao woman called Sanrun in Butterfly Village, when I asked her how she felt about selling her embroidered wedding attire: “The immediate emotion I felt was sadness. But, on second thought, I knew I had the ability to make another high quality dress. What I’m selling is my embroidery, not my skills”. As later chapters will demonstrate,

such reasoning is not only a discursive strategy for self-consolation, but an expression of Miao women's sense of ownership of their own ethnic cultural practice (Sanrun's cultural 'skills' could not be sold/purchased, but only material products produced by those skills). During the early period of the commodification of Miao embroidery, Miao women developed a consciousness of their possession of skills to create elegant and unique embroideries, and, crucially, the market value of such skills in the new market economy. Similar situations have also occurred in other developing countries, where women utilise their traditional skills to enter the informal economy as a response to swiftly changed local economies (Stephen, 2005; Nash, 1993a; Bossen, 1984).

For the Miao during the early period of the commodification of ethnic art in the 1980s, acquiring modern products become an act of acquiring and 'performing' a new and 'modern' identity. In this sense, selling ethnic art/craft to earn an income was not just about escaping poverty, being objects for the tourist gaze (Urry, 1992), or simply being the passive "bearers of Miao culture", as frequently claimed by government officials and tourists alike (Yang, 2011). Instead, it has allowed Miao women to exercise their agency by drawing on their gendered cultural resources to realise their economic, social and cultural ambitions (Goddard, 2003). The commercial activities that revolved around Miao embroidery had become central to how they seek to develop a new meaning of gendered Miao subjectivity in a changing village economy and culture under capitalism. In a later chapter, I examine in greater detail the issue of Miao women's agency and identity formation under modern capitalism.

So far, I have discussed the early processes of the commodification of Miao embroidery

in the 1980s, and its various impacts on the ethnic cultural practices and sense of identity of Miao women. External influences, namely the concerted development of tourism by Chinese authorities, and the emergence of Han and foreign collectors of Miao embroidery, triggered Miao women's awareness of the changing economic order and their place within it. The economy was developing at national, regional and village levels, creating in-flows of manufactured goods and urban cultural symbols from urban areas, along with domestic and international tourists to Miao villages. This was also a period when Miao households in Guizhou suffered severe economic and other hardships and long-term poverty. Miao women learned that their traditional practice had a market value, and that their embroidery skills—previously only markers of their mastery of gender ideals—could become a source of income to an extent that they could not imagine previously. These macro-level events had a profound effect on Miao village life, and how the villagers saw themselves. As stated by Mansperger (1995), the impacts of tourism on small and unindustrialised societies are "substantial, resulting in numerous cultural changes" (1995, p. 87). Miao women in Butterfly Village began to aspire to transform themselves from 'backward' ethnic minority rural peasants into 'modern subjects' with confidence and pride. Since this period, the willingness and motivations behind Miao women's embroidery practices have taken a different form.

Commercial Embroidery Activities from the Late 1980s to the Late 1990s

Prior to the commodification of Miao embroidery, it had been an embodied form of gendered practice (see Chapter 4). Miao women's embroidery practices had always (or for as far back as can be recalled) been gendered, partly because women alone

possessed embroidery skills, and the design and production methods involved constructed, maintained and reinforced women's social and cultural roles. This changed with the commodification of Miao embroidery. In this section, I will explain Butterfly Miao women's commercial activities between the late 1980s to the late 1990s with focus on 1) different types of women's embroidery businesses; 2) the resulting production hierarchies and wealth status between Miao women; 3) the tension between economic incentives and moral values in Miao women's embroidery-related commercial activities.

Different Types of Women's Embroidery Business

Since the late 1980s, many Butterfly Miao women have engaged in selling Miao embroidery. Based on the testimonies that I recorded of Miao women, men and those in the embroidery industry regarding the patterns and scales of their businesses, I have categorised Miao women's economic activities into the following three types: first-generation buyers, second-generation buyers, and small-time sellers.

Type 1: First-Generation Buyers

The first type of business is conducted by the First-Generation Buyers, who are often described as "making a big fortune (*zhuan da qian*)" by other Miao people in Butterfly Village. There were about fifteen of them in Butterfly Village, and all of these women were born in the 1950s and the 1960s. They are the leading figures to have benefited substantially from the emergence of the Miao embroidery industry. The central reason for their success is that these women established and controlled the supply chains as well as distribution channels of top-quality Miao embroideries. These women gained

their foothold by being the first points of contact for visiting collectors, museum staff and researchers from art academies that bought embroideries in Butterfly Village. As the conduits between the outside world and the world of Miao embroidery, they also began to accumulate top-quality "vintage" embroideries by visiting skilled embroiderers throughout the Butterfly area. These women could therefore accumulate a significant collection of pieces that were highly desired by collectors, and to engage directly in trading with collectors that they had forged personal connections with. According to the official chronicle of Taijiang Country (Guizhou Annals Compilation Committee, 1994), since 1985, Butterfly Miao embroidery has been sold to a dozen domestic provinces and foreign countries including the USA, France, Germany and Japan. All of these trades occurred directly through these successful Miao female entrepreneurs.

The entrepreneurial First-Generation Buyers could also control business risks, as in the late 1980s it was still easy to find antique pieces from the pre-industrial era of embroidery production. At the time, there were plenty of willing and skilled Miao women who were eager to sell their embroideries to the Miao entrepreneurs. These producers were only beginning to appreciate the business potential of their ethnic art/craft. For example, Kunlu shared her early experiences with me during an interview: "A collector from Shanghai wanted to buy my embroidered jacket. I was planning to charge 500 *yuan* (AU$100) for it, but put an extra zero by mistake. Without hesitation, the collector readily gave me 5,000 *yuan* (AU$1, 000)!" She only realised later that the demand for high quality vintage Miao embroideries was beginning to overwhelm the supply, and few collectors engaged in haggling for fear of missing out on purchases. Similar stories abounded from my other interlocutors in the village. A collector from

Guizhou province recalled: “High quality Miao embroidery was one of the most sought-after goods in the domestic and even global ethnic craft markets in the 1980s. Sometimes, the process was like an auction. Usually, Miao women sold their embroideries to the highest bidder.”

Although there is no income data available to track the economic activities of these successful Miao entrepreneurs, it is indisputable that they accumulated their wealth through embroidery trading. Most of those I encountered during fieldwork owned properties in cities such as Guiyang and Kaili. Some of them continued to sell embroideries through their small to medium-sized enterprises, which received considerable domestic and foreign orders. Some of them invested their profits into lucrative industries such as real estate and catering. One Butterfly woman sold nearly 1, 000 vintage Miao embroidered clothes to an art company in Shanghai in the early 1990s. She invested the profits in two hydroelectric stations in Butterfly Village, which continues to bring her a considerable income. This is a well-known success story circulating in Butterfly, and she is perceived to be the quintessential First-Generation entrepreneur, as well as living proof that entrepreneurial Miao women enjoyed significant successes during the time when the embroider market was first expanding.

Type 2: Second-Generation Buyers

The second type of embroidery business followed in the footsteps of the First-Generation Buyers. Inspired by the successes of their predecessors, they too began collecting old embroideries to sell to buyers with interests in ethnic crafts. One of the main differences between these two types of embroidery business is that the Second-

Generation Buyers had set up stalls at antique and art markets, including two of the major national antique and art markets: Panjiayuan antique market in Beijing, and the Jinquanhu ethnic craft market in Kaili (see the chapter on research methods for a more detailed description of these markets). With the markets existing outside of the distribution channels controlled by the First-Generation Buyers, these Second-Generation entrepreneurial women could use these markets to establish their own business networks. At these markets, the women sold not only Miao embroideries, but also other types of ethnic fabrics, and even textiles produced by nearby ethnic groups, most notably the Buyi, Yi and Bai living throughout Guizhou and Yunnan provinces. The availability of top-quality Miao embroideries was declining due to the success of the First-Generation Buyers in the late 1980s, thus forcing the Second-Generation Buyers to expand their search for high quality ethnic embroideries and textiles. The business cards that these women hand out frequently state phrases such as "Traditional and antique embroideries, textiles and clothes by Chinese ethnic groups", reflecting their multifaceted and somewhat vaguely expansive business models.

The income levels of the Second-Generation Buyers were highly unstable, as it depended on the quality of the embroideries they could access when the supply was not as steady and abundant as in the 1980s. For example, Miao women Pan Ling and her friend Wang Xiayu had both been selling their embroideries in the Panjiayuan market in Beijing since 1990. In the first year, Ling earned around 20,000 *yuan* (AU$4,000), while Xiayu made a loss. According to Ling, her success stemmed from her research on quality embroideries produced in remote villages before going to Beijing:

> My embroideries were popular, because I knew buyers liked special and elegant designs. Wang's stall was next to mine, and I could see only few people bought her worn-out and faded embroideries. She didn't understand that not any old embroidered clothes would be considered antique.

Pan Ling clearly realised that only high-quality embroideries would translate to commercial value in the market. Knowing that quality embroideries in nearby villages tended to be snatched-up by the First-Generation Buyers with good connections, she would travel further to more isolated villages. Ling's business succeeded thanks to the energy and time she spent searching for good products.

There were clear winners and losers among the Second-Generation Buyers. Some shared the fate of Xiayu: they set up market stalls without sufficient knowledge and market analysis, and as a result, they tended to have unrealistic expectations. They would sell worn-out old embroideries that they did not even like for themselves, hoping collectors and other buyers would somehow see some special value in them. These vendors usually earned a few hundred dollars a year. In contrast, the more business savvy Miao women such as Ling would make as much as one hundred thousand dollars a year by exploiting the expanding market and targeting niche buyer interests, even though they had neither strong business networks nor ample supplies of high-quality Miao embroideries.

Both generations of Miao women entrepreneurs benefited from their roles as

intermediaries who collected and resold quality embroideries. This phenomenon resonates with Tice's study (1995) on Kuna women's engagement with the commercialisation of *mola*, a traditional ethnic weaving in Panama. According to Tice, the emergence of economic and power inequalities among Kuna women stemmed from some women gaining greater access to resources over others. O' Brian also points out that the capitalist development reflected in women's involvement in commercial production creates not only shifts in gendered power-relations, but also the differentiation between women within production hierarchies (1999).

What separated the success of the First-Generation Buyers from that of the Second-Generation was the former's first mover advantage, which allowed greater control over access to resources and social networks. The Second-Generation Buyers, however, did also benefit from being more receptive to the expanding market than the First-Generation, namely by targeting emerging niche buyer interests, which allowed them to sell a more diverse array of products. The ways in which the Second-Generation Buyers operate their businesses thus reflects the mutually constitutive relationship between consumer demands and Miao women's business activities.

Type 3: Small-Time Suppliers

The last category of embroidery business refers to the Miao women who sold their inherited embroideries and embroidered wedding dresses that they painstakingly produced to other Miao women at relatively low prices. Most of these women lived in the poorest and most remote villages in the Butterfly Region, where limited access to transportation made it difficult for tourists or collectors to visit. Due to their relative

isolation, the women in these villages had little knowledge about embroidery market trends or collectors' tastes, and lacked social connections outside of their villages. Their lack of knowledge of the embroidery market meant they were ill equipped to negotiate good prices for their embroideries. Moreover, since they had few high-quality antique embroidered pieces, they could not sustain a stable income from selling embroideries of personal significance, let alone make enough money to start their own businesses. Just as poor Miao women in the earlier period of the commodification process sold their inherited embroideries to visiting tourists at their asking price to earn cash to alleviate poverty, the Miao women in remote areas now sold their inherited embroideries to other Miao women who were buyers from more affluent villages. These Small-Time Suppliers of personal embroideries were at the bottom of the hierarchy in the Miao embroidery industry.

Price Negotiations and Unequal Power Relations Among Miao Women

As described above, Miao women occupied differential positions in the embroidery industry. Their unequal power relationships became most obvious when they negotiated prices with each other. Arjun Appadurai uses the phrase the "regime of value" (1988, p. 57) to explain the different cultural presuppositions and value evaluations of a commodity between buyer and seller. In his explanation, the commercial value of a good differs from person to person, depending on their respective cultural understandings of the good in question. The value of a commodity is therefore determined significantly by its cultural meaning, rather than its material value alone. Applying this idea, when Miao embroidery becomes a commodity, its monetary value is something that is negotiated by the actors involved in its sale and purchase. Below, I will explain how pricing shifts as embroideries change hands, and how these shifts

reflect the power differentials between sellers and buyers.

Using a small piece of embroidery as an example, the following explains the increase in sale prices as it was sold by Small-Time Sellers to intermediaries (these can be either First- or Second-Generation Buyers), who then resold it to a collector.

Figure 5.1. A schematic circular-flow diagram of Miao embroidery commodity. Drawn by author.

The first price negotiation occurred between the Small-Time Seller and the First- or Second-Generation Buyer, both of who were Miao women. Their price negotiation was heavily influenced by the living standards in Butterfly, a cash-starved community. The labour of the Seller living in poverty was undervalued, therefore making them eager to earn cash, and allowing the Buyer to exploit this eagerness to lower the purchase price of the embroideries. The value of embroideries here therefore aligns with Karl Marx's criterion on a product's value: "the labour-time required to produce any use-value under the conditions of production normal for a given society and with the average degree of skill and intensity of labour prevalent in that society" (1974, p. 129). However, if the Seller possessed top quality antique embroideries, and crucially, if she was aware of their market value, her negotiation power would increase.

The second price negotiation occurred between Miao intermediaries and collectors. The former gained the upper hand when she possessed top quality antique embroideries, whose rarity and high market values of which the collector was aware. In other cases, the collector would suggest prices based on his/her estimation of the values of the embroidery pieces, especially when these were commonplace embroideries. When the suggested prices were unsatisfactory for the intermediaries, their knowledge of embroideries as well as their ability to give effective sales pitches became crucial for the final pricing. There is a popular saying amongst Miao women who sell embroideries in art markets even today: "The price of an embroidery piece depends on whether you can tell a good story about the embroidered patterns to buyers". This articulates the fact that the value of embroidered pieces is no longer just about the skill and labour of production, but is also about creating symbolic values based on the supposed uniqueness of their aesthetic, historical and cultural characteristics. When the collector hands cash to the intermediary, he or she is converting economic exchange value (money) into a sign value (embroideries). Whereas the first price negotiation was anchored in an "economic calculus", the second price negotiation no longer relates to it. Successful Buyers, whether of the First- or Second-Generation, increased their chance of winning the negotiation by gaining knowledge about embroidery patterns, their symbolic meanings and communities in which they were produced. This ability to increase the symbolic value of embroideries allowed these entrepreneurial women to accumulate economic capital.

While Miao women as sellers and buyers of embroideries had formed new economic relations with each other and/or outsiders, this does not mean that they did so without any cultural or moral concerns. In the next section, I elaborate on this, and explain the

Miao moral and cultural values that clash with the selling of their embroideries, and how Miao women negotiate the competing economic, cultural and social demands placed on them as they participate in the embroidery business.

To Sell or Not to Sell: Economic Incentives vs Moral Values

Despite the fact that embroideries were sold in a public manner in Butterfly Village from the 1980s, and increasingly done so in the late 1980s and into 1990s, whether this was a legitimate activity had long been open to dispute within Miao villages. Tales expressing this ambiguity and even condemnation of those engaging in the activity circulated widely around the village. The following is one such story, as told by Shou Yang during an apprenticeship training session at her house:

> A Butterfly Miao woman fell suddenly ill and died soon after she turned a handsome profit by selling Miao embroidery. Butterfly people widely believed that she was severely punished by Miao ancestors, as "she sold something she was not allowed to sell.

This is one iteration of many similar stories about the misfortunes of successful Miao female entrepreneurs in the embroidery business that I heard during my fieldwork, wherein embroidery sellers are portrayed as unorthodox and even immoral rather than rational economic actors utilising their ethnic and cultural resources (Gherardi & Perrotta, 2014). That these stories acted as cautionary tales, with their strong undertones of unease and disapproval, can be said to reflect the transformation of the sacred into

the ordinary. According to Kopytoff (1988), some things are marked as “sacred” in every society, representing its belief system, history and culture. To ensure their sanctity, certain objects must remain singular, unique and constant. Once they become ordinary commodities, they become exchangeable, therefore interchangeable (p. 73). In other words, the commoditisation is anti-sacred as it homogenises value. Various communities have attempted to protect their sacred objects from becoming commodified. For example, Davenport explains the difference between sacrificial utensils and household utensils in the Solomon Islands (2005). The sacrificial utensil is produced by using specific aesthetic skills such as woodcarving to highlight its spiritual value. Importantly, the sacrificial utensil is officially precluded from commodification, and only used for religious ceremonies (pp. 104-105). The loss of cultural meaning and significance through the commodification of sacred objects clearly made some Miao in the Butterfly Region very uneasy. As I discussed in the previous chapter, Miao embroidery is a cultural symbol in Butterfly Miao society, as its patterns and designs are a visual representation of migratory stories, legends and beliefs of each Miao sub-group. Inherited Miao embroideries maintain emotional connections among matrilineal relatives, and when women wear them, their embroidered clothes express their desire to receive the ancestors’ blessings and protection. Traditionally, Miao embroideries were considered irreplaceable and un-exchangeable, so that cultural singularity could be maintained. Seen in this light, it is understandable that some saw Miao women’s entrepreneurial activities that exchanged embroideries for money as disrupting the cultural value system, and even an affront to the traditional understanding of what it means to be Miao.

However, not all women engaged in the embroidery business were condemned equally.

On the one hand, there was a certain level of sympathy towards the Small-Time Sellers who were living in poverty and thus had little choice but to sell their personal possessions for extra income. On the other hand, those acting as intermediaries, namely, the First- and Second-Generation Buyers, were censured, as their economic activities were perceived to be motivated by greed, and to have more detrimental impacts on Miao culture because they played a key role in promoting the commodification of embroidery. This differential attitude expresses the contradictions and ambivalences regarding the expanding capitalist economy in the villages, and the associated social and cultural changes. Miao women's ethnic art/craft now has considerable economic value, and is a new source of household income to help alleviate poverty. However, with more and more embroideries leaving the producers and the original cultural context, its sacred and cultural significance was transforming, and overall, diminishing. Butterfly society was experiencing a gradual transformation of its economy and culture, and Miao women were at the forefront of these changes throughout the late-1980s and 1990s.

Given the local Miao stigmas attached to embroidery business, both the First- and Second-Generation Buyers were eager to distance themselves from the image of greedy entrepreneurs. The following interview excerpts are from three Butterfly Miao women who engaged in the Miao embroidery industry in the 1990s. I met them in various locations and the interviews were conducted a few months apart from each other. However, the similarity between their anecdotes is striking. When asked to describe how they began their businesses, these Miao women all stressed that selling other women's embroideries was a result of 'external' forces. The implied message is that their selling of Miao embroideries was not about their own desires for improved economic and social status. The following interview excerpts are exemplary:

I sold my own embroidered clothes to a collector. He tried to convince me to collect and resell others' embroideries to him. I rejected the suggestion at first, because it felt inappropriate to sell others' embroideries. But some Miao women knew I had a collector friend, and brought their embroideries to me and asked if I could help them make money. Some of them even left their embroideries without my consent. We are all Butterfly Miao women, and they needed my help, so I felt that selling their embroideries became my responsibility." (Zhangou, mid-60s)

I was a restaurant waitress in Kaili. One day, an official from the Tourism Bureau asked me to wear my traditional embroidered clothes for visiting tourists. Many tourists asked me where they could buy such beautiful clothes. The official suggested that I collect embroideries in my village and sell them to tourists. He said it would be a win-win business: our Miao women could earn money, and tourists would be happy. He said he would do his best to help me run this business. To be honest, I only began selling Miao embroidery because I didn't want to disappoint him." (Liuchang, mid-50s)

An American collector bought two embroidered pieces from me in 1991 in Butterfly. The collector's translator said that she would have to return to America in three months' time, and she did not know whether she could come to China or visit our village again. The collector asked me if I could find some good Miao embroideries for her, then she would come back to Butterfly Village to pick them up before returning to America. I remember her looking me in the eye and saying: 'I will be very happy and cherish these embroideries if you can find some for me.'

How could I say no in such a situation?" (Xiuzhong, mid-60s)

These women's own accounts of how they had established their businesses gave a different impression. The three women quoted above spared no effort to establish social networks, find quality embroideries and expand the scale of their businesses in order to turn more profits. Given the competing moral values in the villages, however, they needed to perform 'good Miao women' in ways that were more congruent with local gendered cultural ideals. According to Kopytoff, the resistance against the commodification of "sacred" objects in a society may stop individuals' pursuit of profits through commodity exchange (1988). The Miao female entrepreneurs had successfully maneuvered fellow villagers' unease and ambivalence towards the commodification of ethnic embroidery by learning to juggle different roles based on multiple identities, interests and influences. Chapter 7 will examine in more detail Miao women's changing economic status and gender relations, both at home and in the broader village community.

Red Village and Silver Village: Counterexamples to the Successful Commodification of Miao Embroidery in Butterfly Village

While some types of Miao embroidery have become more highly valued via the specific needs and interests of collectors, other types remain in relative obscurity. In this section, I will examine the commercial development of Miao embroidery in my two supplementary field sites: Red Village and Silver Village. Although the Miao embroidery in these villages is similar to that practiced in Butterfly Village, being an everyday cultural practice that constitutes and reinforces gender ideals and visually represents local history and culture, some key differences among the three villages have

led to their diverging fates.

The Failed Commodification of Miao Embroidery in Red Village from the 1990s to the 2000s

The 'red embroidery' of Red Village in Guizhou is the first exemplary case. This style of Miao embroidery is produced and worn by Miao women in Jianhe County in Southeastern Guizhou, 294km from Guiyang, the provincial capital. Jianhe County is under the administration of Qindongnan Miao and Dong Autonomous Prefecture[27]. The name "Red embroidery" is rooted in its colour: a red field dotted by some green and blue geometric patterns (see images below).

Photo 5.1. The front view of Red Embroidered attire.

Photo by author

[27]According to the population census in 2010, Miao people account for 61% of the total population of the county. Please see: Population Census Office and National Bureau of Statistics of China, 2012.

Photo 5.2. The back view of Red Embroidered attire.

Photo by author.

The geometric patterns of Red embroidery are rich in symbolic meanings, like other styles of Miao embroidery, in which the Miao women I interviewed in Red Village were well-versed. As shown in the following picture, triangle pattern represents a swan, which this sub-group of the Miao sees as their ancestor. The different lengths of rectangles indicate the migration routes of this Miao group. The anti-S pattern signifies their farming culture. These cultural symbols create cultural values, as attested by the fact that Red embroidery was included in the first national intangible cultural heritage list, which was released by the Ministry of Culture in 2006. Among dozens of Miao embroidery types in Guizhou, only several are in the list, including the one in Butterfly Village, Silver Village, Xijiang Village, Red Village, Huangping Village and Huaxi Town. [28]

[28] For more details of the list please see: Ministry of Culture and Tourism of the People's Republic of China. (2004). National List of Intangible Cultural Heritage of China. Retrieved from http://www.ihchina.cn/project#target1

Photo 5.3. Close up of patterns of Red embroidery.

Photo by author.

However, the commercial development of Red embroidery did not go as planned. Villagers informed me that collectors had rarely purchased their embroideries over the past few decades. One main reason is the aesthetics of Red embroidery. The main technique used in this type of embroidery is the relatively simple flat stitch. In both aesthetic and technical senses, Red embroidery is considered ‘plain’, especially compared with the detailed and vibrant Butterfly Miao embroidery.

Photo 5.4. Well-dressed butterfly Miao women under the sunset in the Sister Festival.

Photo by author.

Several domestic collectors echoed this judgment, responding to my questions regarding their assessment of Red embroidery: “Not beautiful enough” and “the techniques are too simple”. In addition, few researchers have examined the cultural and aesthetic values of Red embroidery, meaning that it remains less well known and appreciated in academic and arts scenes across China and internationally. Ethnic arts and crafts can struggle to become desired commodities without receiving a ‘stamp of approval’ from influential scholars or collectors. The case of Red embroidery illustrates the importance of non-Miao specialists’ aesthetic tastes (sometimes based on stereotyped ideals of Miao culture) on whether or not this ethnic art can benefit from the commodification process.

Moreover, the unequal power relations between different levels of government in China has impeded the commercial promotion of Red embroidery. As China has adopted a 'government-led' strategy in the development and the operation of ethnic tourism (Deng, 2000), many government agencies have come to participate in the planning and promotion of the ethnic tourism industry. Conflicts between these agencies occur regarding funding allocations, resource distribution and policy privileges (Yang and Wall, 2016). In terms of Miao ethnic tourism in Guizhou, the unequal power relations between provincial and village governments have inevitably created an uneven development in various Miao villages, as demonstrated by the case of Red Village.

As mentioned in Chapter 3 (Background), the provincial government established the "ethnic cultural tourism route" in Qiandongnan Miao and Dong Autonomous Prefecture in the 1980s. Butterfly Village and other Miao villages included in the route swiftly became popular tourist spots. Moreover, tourists and collectors showed interests in and began to purchase local ethnic crafts, which created a small but steady flow of income for producers of some specific ethnic crafts. Since 1986, the Guizhou Tourism Bureau has promoted specific regional ethnic crafts, such as Miao embroidery in Butterfly Village and Xijiang Village, clay whistles in Huangping county, and batik fabric in Anshun City. In analysing the market potential of these ethnic crafts, the Guizhou provincial government highlighted that they "already gained popularity in markets" (Guizhou Chronicles Compilation Committee, 2009, p. 365). This indicates that it considers these crafts to be a less risky and more efficient route to boosting the economy of the province. This strategy was also reflected in the Guizhou government guidelines on developing tourism in the 1990s. *The Ninth Five Year Plan on Provincial Economy and Social Development*, compiled by the Guizhou Provincial People's Government set

out the following policy directions for the development of tourism in Guizhou between 1996-2000: market orientation; lower financial input to higher financial gain ratio; priority given to promoting popular and well-known tourism sites and products; combine tourism with provincial economic development; highlight local distinctness; balancing environmental protection and tourism (Guizhou Chronicles Compilation Committee, 2009). Given these policy directions, the provincial government had fewer incentives to develop those less well-known and more isolated villages and their cultures.

Although the Red Village government certainly spared no effort to develop its tourism economy, they gained little attention from the provincial government, and did not receive adequate financial, policy and intellectual support to successfully develop ethnic tourism. Wangfa, the retired Village Head expressed his disappointment while explaining the failure to attract tourists in the early 1990s:

> The county government asked us villagers to "do tourism", and said this was the instruction of the provincial government. The Vice County Mayor showed us the successful examples of other villages, and promised us that once we "do good tourism", life would dramatically change. The provincial government would build new roads and a village hospital, and update our old houses. Villagers would earn money from tourists. Most villagers were inspired by his words. As the Village Head, I was led to believe that even our remote rural village had a chance to change its isolated status to improve the poor living conditions that our people live in. To meet these goals, I thought, we should be open-minded and actively follow the

instruction of the provincial government.

> But things did not go as planned. In the summer of 1991, the county government notified us that the provincial government would assign an investigation team to our village to determine whether our village was suitable for tourism development. We villagers tried to impress officials from a higher-level government who were planning to visit, so that they might give us money and other resources. We made a lot of efforts in our preparations: we cleaned lanes and rooms, made rice wine and smoked pork, performed Miao songs and dances. The women dressed themselves in red embroidered clothes. The men practiced speaking Mandarin. We made sure everything looked good for their arrival. But, they didn't turn up.

This story illustrates the tensions between provincial and local priorities, and the unequal distribution of government resources. Although members of Red Village desired to develop ethnic tourism, their ability to enact this desire depended on the government-led plans for Guizhou's tourism development. The efforts of communities like Red Village therefore often fail if state financial and social supports are inadequate.

Moreover, although Red embroidery seemingly had the necessary ingredients to become an attractive selling point of ethnic tourism just like Butterfly embroidery, the provincial government showed little motivation to support its commodification on the grounds of their aesthetic values and priorities. Red embroidery is a vital and distinct cultural heritage for Red Village, yet the Guizhou provincial government considered it ordinary and even unimpressive. When the ethnic crafts industry was still emerging in the 1980s, collectors and tourists had limited information on Guizhou Miao

embroideries. This led to the circulation of only certain targeted embroidery styles in art and tourism markets. Under this circumstance, the provincial government became an arbiter of both the cultural and market values of various types of Miao embroidery for the tourism industry. When a particular ethnic craft received the government's support and promotion, its commercial development had a better chance of success to meet market demands. As a key comparative example, in examining the development of Peranakan culture for the tourism market in Singapore, scholar Joan Henderson points out that Singaporean state authorities determined what images of ethnic culture were promoted and circulated according to what they considered to be an attractive Peranakan culture (2003). In the case of Red embroidery, the Guizhou government did not include Red Village and its culture into the ethnic tourism programs throughout the 1980s and the 1990s. The case of Red Village therefore demonstrates that the commercial development of ethnic crafts is a complex and dynamic process, and multiple factors influence its success. Such factors include national policies, ethnic minorities' desires to commodify their culture through the sale of traditional items (Kaltmeier, 2016), and tourism market demands (Chhabra, 2005), all of which impact the speed and scale of the commercial development of ethnic crafts (Oakes, 2013; Toops, 1993).

The Limited Commodification of Silver Miao Embroidery in Silver Village in the 1990s to 2000s

Silver Village provides yet another contrasting case to both the successful commodification of Miao embroidery in Butterfly Village, as well as the failure to develop the embroidery industry and ethnic tourism in Red Village. We have seen that Red embroidery failed to attract state officials' backing due to their policy priorities, as

partly based on aesthetic values. In this respect, Silver Village was more comparable to Butterfly Village, since the style of embroidery in Silver Village also received high praise from art collectors, scholars and government. Silver Village embroidery was included in the first national intangible cultural heritage list released by the Ministry of Culture in 2006. Among various types of Miao embroidery in Guizhou, only four types were on this list, including that from Butterfly Village, Silver Village, Xijiang Village and Huaxi Town. [29] The primary reason that Silver embroidery is highly valued is its use of tin strings instead of silk thread. People thus call this embroidery "tin embroidery" to highlight its unique aesthetic style, which is rare not only in Miao embroidery, but also in Chinese embroidery more broadly.

Tin embroidery requires highly adept skills, and is very time-consuming, as a dozen processes are involved in completing even a small piece. The steps involved include 1) using cross-stitches to draw a pattern on white cotton fabric; 2) Dying the fabric within indigo; 3) cutting tin sheets into 0.5mm to 1mm even strips; 4) weaving tin strips into the threads of the pattern on the indigo-dyed fabric; 5) cutting off each stripe and folding the two ends to make a buckle; 6) flattening the tin buckle; 7) starting the next buckle with the same process. It is not an exaggeration to say that making tin embroidery is torturous for Miao women's hands, arms, eyes and minds. It is the hard labour involved in these complex and repeated processes that give tin embroidery its glistening appearance, with the delicate tin strips interwoven intricately with the deep blue fabric, which is often likened to sun shining over a lake's surface (see image below).

[29] Ministry of Culture and Tourism of the People's Republic of China. (2004). National List of Intangible Cultural Heritage of China. Retrieved from http://www.ihchina.cn/project#target1

Photo 5.5. A Miao woman is flattening the tin buckle.

Photo by author.

With these remarkably sophisticated skills, tin embroidery has gained attention from the Chinese fashion industry in recent years. In 2012, a top commercial fashion show was held in Beijing, and a number of designers from international luxury fashion brands such as Chanel and Louis Vuitton exhibited their clothes. A contemporary-style dress incorporating Miao tin embroidery unexpectedly won the ‘special award’. The dress was co-designed by Caixia Chen, the creative director of a luxury fashion brand, and Sanjiu, a Miao woman from Silver Village. This competition has successfully introduced Miao tin embroidery into the international fashion world. In the following few years, several tin Miao embroidered modern dresses were worn by well-known actresses at the Paris Fashion Week.

Photo 5.6. The award ceremony at the fashion competition in Beijing in 2012.

Photo by Sanjiu

However, despite the unique aesthetic style and exquisite embroidery technique, combined with some instances of significant exposure as outlined above, the tin embroidery of Silver Village has still failed to flourish commercially. In stark contrast to the gradual development of the Miao embroidery market in Butterfly Village over more than a decade between the 1980s and the 1990s, wherein local Miao women actively participated in selling and trading embroideries, few women in Silver Village had such experience. Despite the emergence of scholarly interests in Miao embroidery in Butterfly and other nearby villages since the 1990s (Fan, 1992; Luo, 1992; Xue, 1996; Yang, 1997), tin embroidery in Silver Village has barely been investigated. This is mainly due to the fact that existing scholarly research tends to examine Miao embroidery in the context of booming ethnic tourism, which does not apply to Silver Village.

One of the primary reasons for the limited commodification of tin embroidery in Silver Village is the isolated location and a lack of efficient transportation, both of which severely reduces the accessibility for tourists. As explained in more detail in Chapter 2 (Research Methods), Silver Village is one of the most remote villages in Guizhou. It is located at the top of steep cliffs and rocky mountains. The only way to enter the village is to take a 3-hour trip by ferry from the neighbouring township Nanzhai, followed by a 3-hour mountain trek. A news article titled "A beautiful existence: visiting the homeland of tin embroidery" in *Guizhou Daily,* the largest newspaper in the province, describes the village's isolation as follows (Wei, 2009, p. 11):

> The mountain path to the village is extremely steep and slippery, which hampers outsider access to the village. … In the spring of 2009, a few American tourists were scared to continue on the path up the mountain they reached the bottom of it. Several young Miao men voluntarily carried these foreigners and climbed to the top of the mountain where Silver Village is located… Villagers earnestly hope that the government will build a road to the village to enhance accessibility, which is crucial for the village's tourism development. Then, beautiful Silver Village will the gain opportunity to present its unique charm to outsiders.

Adequate transport infrastructure is indeed a crucial factor for the development of rural ethnic tourism (Khadaroo & Seetanah, 2008). The Chinese proverb "building roads is the first step to wealth (*yao xiang fu, xian xiu lu*)" aptly applies to ethnic tourism in Guizhou. As most ethnic groups in Guizhou live in remote mountainous areas, the building of access infrastructure such as roads, trains, buses and boat launches is crucial

for ethnic tourism. A staff member at the Guizhou Tourism Bureau once remarked: "Some villages have traditional ethnic customs, intact architecture and a rustic atmosphere that would appeal to tourists, but poor transportation and remoteness hinder their promotion." The commodification of ethnic crafts is largely fostered by the growth of the ethnic tourism industry (Nash, 1993a; 1993b), and the hindrance of the latter remains a significant problem for Silver Village tourism development today. In 2014, the central government named Silver Village as one of the "nationally supported villages for tourism development, to invest in tourism infrastructure, especially roads, electricity, water and toilets, in order to increase tourist arrivals" (National Ethnic Affairs Commission of the People's Republic of China: 2014)[30]. In 2017, a new road from the Jianhe town centre to Silver Village was built, which has, to a large extent, improved accessibility. However, the past failure to attract tourists in the 1980s has continued to haunt the village, and many feel that they have 'missed the boat' of the tourism boom, leaving them feeling somewhat demoralised. As one of my interviewees in Silver Village bitterly sneered: "Nobody comes, who buys?"

Perhaps counter intuitively, another major reason for the limited commercial development of tin embroidery in Silver Village is the unique artisanship that it requires. Much of the literature examining the commodification of ethnic crafts has maintained that being handmade is a determining factor for an item's popularity (Luckman, 2015; Vadakepat & Khateeb, 2012; Liebl & Roy, 2003; Littrell et al., 1993). Firstly, ethnic crafts convey traditional symbolisms which tourists seek out in their quest for, and

[30] National Ethnic Affairs Commission of the People's Republic of China. (2014.) *The first batch of national representative ethnic villages*. Retrieved from http://wap.seac.gov.cn/seac/xwzx/201409/1002845.shtml.

appreciation of, the ‘exotic Other’. In a study conducted to assess what kinds of craft souvenirs are considered authentic by tourists, ‘handmade’ ranked second among various criteria, including uniqueness and originality, aesthetics, function and use, cultural and historic integrity, geniuses, and shopping experience (Littrell et al., 1993). As discussed earlier, urban tourists enjoy and seek out an atmosphere that evokes pre-industrial and ‘pre-modern’ life within the ethnic tourism experience, and observing the production process of ethnic crafts satisfies these desires (Sharpley, 2018). Thus, ‘crafts’ “represent local traditions and indigenous populations, [while] they also symbolise the places visited by tourists, the experiences they had, and a souvenir to be taken for friends and relatives” (Mustafa, 2011, p. 145). Tourists’ penchants for ethnic crafts are ubiquitous across localities. According to one study, nearly half of the tourists visiting Malaysia buy local craft objects (Mogindol & Bagul, 2016). In Thailand, tourists spend a considerable portion of their spending money on local craft souvenirs (Parnwell, 1993). Domestic tourists in China are especially eager to buy crafts above other types of ethnic souvenirs (Yang & Wall, 2008). The tourist’s desire to take home mementos of their visit to an ‘exotic’ and ‘authentic’ place is a global phenomenon (Kim & Littrell, 2001). For artists and collectors, ethnic craft not only represents a specific culture, but is also an artistic work filled with what Benjamin terms ‘aura’ – the affective allure and artistic authority that emanates from the encounter among the producer, the viewer and object (Cant, 2015). In ethnic craft markets, the ‘aura’ is perceived by buyers and collectors to be particularly marked in works made by highly skilled individual craftspeople (Chibnik, 2003). The high value placed on the handmade nature of many ethnic crafts, I argue, works against the interests of Silver Village, when it comes to promoting tin embroidery.

This apparent paradox—tin embroidery is intricately made and widely considered beautiful by outsiders, yet it failed to develop into a full-fledged industry—can be explained by several factors. Firstly, Miao women in Silver Village did not share the strong desire, required knowledge or resources that the women in Butterfly Village had to engage with the embroidery business. Embroidery is an extremely time-consuming work for all women throughout broader Miao society. However, taking a 10cm x 10cm embroidery piece as an example, the time needed to complete a piece of Butterfly, Red and Silver styles are, respectively, approximately 10 hours, 8 hours and 20 hours. To finish a complete set of tin embroidery attire worn in Silver Village, it takes 15 years. The highly labour-intensive and time-consuming nature of producing tin embroidery means that Miao women in Silver Village generally own only two full sets of embroidered clothing in her entire lifetime. Compared to Butterfly Village households, the existing stock of inherited antique embroideries was low in Silver Village to begin with, and it was not viable to sell them off and produce new pieces in order to restock, due to the time that producing new pieces would take. As a result, although collectors are keen to purchase tin embroidery, the demand far outweighs the supply, to the extent that it is hard to sustain even a small-scale commercial cycle of production and sale of Silver embroidery.

Moreover, tourists' aesthetic preferences strongly affect the market value of embroideries. Popular Miao embroideries (such as Butterfly embroidery) are usually more figurative, containing animal and plant motifs with bright, contrasting colors. To many buyers, these features epitomise the aesthetic characteristics of 'authentic' Miao art and craft. Tin embroidery does not look very 'authentically Miao' for the untrained eye of ordinary tourists, because the main patterns are geometric rather than figurative,

consisting primarily of lines and rectangles, due to the use of tin instead of thread. Finally, most ordinary tourists seek to purchase affordable Miao embroidery souvenirs, rather than a luxurious and expensive craft. According to Wilkins (2011), tourists buy souvenirs as a reminder as well as evidence of their travel experience. Souvenirs are also bought as gifts for family and friends (Littrell et al., 1993). Moreover, tourists are keen to select items that demonstrate their personal aesthetic refinement. In Butterfly Village, the most popular embroidery souvenirs are machine-made wallets, coasters and handmade small-sized embroidery pieces whose prices are from 10 to 200 *yuan* (AU$2-40). Most tourists will not expend large amounts of money on exquisite but very expensive handmade pieces such the tin embroidery produced by Silver Village.

The following picture shows a framed tin embroidery souvenir sized 10cm x 10cm that I purchased at a souvenir shop for 1000 *yuan* (AU$200). This piece was the cheapest tin embroidery product available in that particular marketplace, according to the shop manager.

Photo 5.7. A Tin Miao embroidery souvenir.

Photo by author.

The limited commercial development of tin embroidery thus reveals the dynamic relationship among the crucial factors of the aesthetic characteristics of Miao embroidery, geographic conditions, and ethnic tourism development, and how all of these interact to form the uneven commercial development of Miao embroidery in Guizhou province. All of these respective elements determine the speed and scale of the commercial development of Miao embroidery for tourism purposes, which in turn affects social and cultural norms, the economic organisation of the village, and Miao women's identities and roles within their communities. I will explore these changes further in the following chapter.

In this chapter, I have outlined the earlier stages of the development of the Miao embroidery industry in the Butterfly region. As I have showed, the emergence of the commodification of Miao embroidery hinged on Miao women's active participation in the emerging market, both as producers and sellers of embroidery 'products'. I have identified different modalities of engagement in embroidery business during the 1980s and 1990s, ranging from the First-Generation Buyers, the Second-Generation Buyers, and the Small-Time Sellers. The development of wealth and status differences among Miao women under the contemporary capitalist economy has laid the foundation for further reconfigurations of gender roles, ethnic identity and cultural practices, which I will examine further in Part 3. Before delving into these issues, however, within the next chapter I shift my focus to examine the Miao embroidery industry in the mid-2000s, which is distinct from the previous two decades in terms of the political background, and the patterns of production and trade.

Chapter 6 The Evolution of the Commodification of Miao Embroidery in Butterfly Village Since the 2000s

In this chapter, I will investigate the evolution of the commodification of Miao embroideries in Butterfly Village since the 2000s. Prior to this period, Miao women sold embroideries from their personal collection. They were inherited from generations of women in their households. Their production was solely by hand, and the scale was small. Miao women had established distribution networks, creating distinct roles within this budding commercial sector. This provided new forms of income for many Miao women, but opportunities for capital accumulation were unevenly distributed. Over the last two decades, ethnic tourism has become fully fledged, and demand for Miao embroideries has grown exponentially, inducing ever-evolving ways of producing embroidery 'products'. Such consumer demand could no longer be met by merely scouting for a finite number of vintage embroideries Miao women kept at home, and new production and distribution methods needed to be invented. Below, I will examine how ethnic tourism in Guizhou Province and the further commodification of Miao embroidery in Butterfly Village have converged to create new economic opportunities and cultural practices for the Miao.

The Loss of High-Quality Vintage Embroideries

The People's Daily, the most authoritative official newspaper of the Chinese Communist Party, published an article in 2002 reporting a "get-rich-quick" story of a

Butterfly Miao woman: “Selling Miao embroidery has changed Zhang Ting Zhen’s life … She left the mountainous home village and sold embroideries she gathered in Miao villages. She became rich quickly” (H. T. Sun, 2002). This article praised Zheng’s astute entrepreneurship, and was written in support of the strategy of local governments in southwest China alleviating the poverty of ethnic minorities by encouraging them to use their own cultural resources to boost ethnic tourism (T. Liu, 2013; Wang et al., 2010; W. Zhao, 2009). Ten years later, another authoritative official newspaper, this time from Guizhou, published an article titled “Dozens of Old Miao Embroideries Did Not Sell” (Liu, Li & Chen, 2011). It told the story of a Butterfly Village women called Long Shengying, who was reluctant to sell the Miao embroideries she collected because high-quality vintage embroideries had become rare in Butterfly Village by this time. Although the headline referred to the fact that none of her vintage embroideries were sold, the story stressed the woman’s unwillingness to sell them. The two articles have a similar theme, but the content is distinct, which reflected a severe loss of Miao embroideries following the relentless pursuit of them by predatory business activities in the decade between the stories. The difference also indicates the ideological and behavioural shifts at the government level as well as among Miao women.

Due to years of commercial development, it has become incredibly difficult to find high-quality vintage Miao embroideries in Guizhou, and even throughout mainland China. The prices of such embroideries have doubled over recent years, which led to a further depletion of quality vintage embroideries in the domestic market. For example, the price of a 20cm x 20cm vintage embroidery increased four-fold, from approximately 250 *yuan* (AU$50) to 10,000 *yuan* (AU$2,000). The sharp rise over time has encouraged even more Miao women to part with embroideries they crafted themselves,

as well as those they have inherited. Increased scarcity has energised competition among buyers. Since foreign collectors were able to meet higher prices than their domestic counterparts, most high-quality vintage embroideries have flowed out of China.

Yong Yang, a collector of Miao embroidery from Beijing, whom I met during fieldwork, was a domestic collector priced out by foreigners. In 1993, he paid 4,000 yuan (AU$800) for a vintage Miao embroidery piece from a Butterfly Village Miao woman. After a month, the same Miao woman offered him triple the price to recover her embroidery because, as he discovered later, a Japanese collector was willing to pay her 20,000 *yuan* (AU$4,000). A French museum curator who visited Guizhou remarked to me: "In the future, Chinese scholars have to come to our museum to study Miao embroidery." A curator of the Guizhou Provincial Museum echoed such a concern: "Our museum only holds 20 sets of high-quality Miao embroidery clothes. The prices have been hiked by foreign interests so much that the state appropriation is hardly enough to buy high-quality embroidery."

The serious loss of vintage Miao embroidery to overseas buyers has attracted a great deal of attention of the Guizhou provincial government. Since 2002, the government has announced a series of policies and measures to protect Miao embroidery 'resources'. For example, the Regulation for the Protection of Guizhou Ethnic and Folk Cultures was been issued in 2002, which stressed the importance of protecting the traditional clothing of 'ethnic groups' as well as their representative arts and crafts (Nitzky, 2013, p. 213). In 2004, the Ethnic and Folk Cultures Protection Committee was established

by the Guizhou government, aiming to “save, protect and develop ethnic cultural resources” (General Office of the People's Government of Guizhou Province, 2004). In seeking to retain Miao embroidery, the most influential governmental measure has been a competition named “Colourful Guizhou: Tourist Commodities and Craftsmen Traditional Skills Competition” (Zhang & Chen, 2014). This annual competition has been sponsored jointly by the Guizhou Commerce Department, the Guizhou Tourism Administration and the Economic and Information Commission of the Guizhou Province since 2006. This competition greatly affects the commercial development of Miao embroidery in Guizhou. Before detailing the relationship between the competition and the Miao embroidery industry, however, I will detail what motivates the Guizhou provincial government to hold this competition, and how it relates to the government’s re-estimation of the cultural and commercial value of Miao embroidery, and of the role Miao embroidery plays in promoting the social and economic development of the province.

The Development of the Culture Industry in China

Since 2001, developing, fostering and pushing culture industries has become a new method of promoting the Chinese national economy. The term “culture industry” first officially appeared in *The Tenth Five-Year Plan for National Economic and Social Development of the People’s Republic China* (2001), as one of the most important social and economic development initiatives for the coming years. Following this, the Ministry of Culture released a public document titled *Views on Supporting and Promoting Culture Industries* (2003), which explained the role and significance of developing culture industries. That these high-profile public policy documents engaged

with the concept of culture industries shows the central government's serious attention to the matter.

The Chinese government's understanding of the "culture industry" is different from the original meaning of the term coined by Adorno and Horkheimer. In their article "The Culture Industry: Enlightenment as Mass Deception", they used the term "culture industry" to describe the commodification of cultural forms in capitalist societies (1977). Their text critiqued the economic motives behind most cultural productions, which sacrificed artistic and intellectual characteristics such as creativity, critical thinking and uniqueness. Their conceptualisation of the "culture industry" was a means to express the Frankfurt School's criticism and concern regarding the production of entertainment and amusement as both a product of, and the purpose behind the growth of monopoly capitalism (Berman, 1989). However, according to the above policy documents, the "culture industry" refers to "business-type sectors engaging in cultural product production and providing cultural services" (Ministry of Culture, 2003, p. 1). For the central government, the role of the "culture industry" was to transform cultural resources into economic assets. A similar appropriation of the culture industry as a tool of national economic development, particularly tourism, has been observed in other contexts, such as in various European nations (Richards, 1996), Kenya (Akama, 2007) and South Korea (Lee, 2007) to name a few. At a time when China's economy and global influence have been growing rapidly, cultural politics has begun taking the centre stage, shaping not only the kind of tourism promoted nationally, but also national and ethnic imaginaries (Blumenfield & Silverman, 2013; Su & Teo, 2009; Sofield & Li, 1998).

In the years that followed, many provinces began to develop unique provincial cultural resources and promoted them using well-oiled marketing operations. A few successful examples include the Confucius Institute in the Shandong Province, which aims to promote education of Confucian culture (Yan & Bramwell, 2008), and a theatre performance sponsored by the Guangxi Zhuang Autonomous Region called "Impression Liu Sanjie", which is based on a famous legend of the Zhuang ethnic minority and uses Guangxi's natural landscapes as its stage (Hou, Yan & Li, 2010). The performance and its combination of ethnic and natural tourism has proved highly popular, as it met the demands of not only international tourists in search of exotic remote destinations, but also those of domestic tourists for whom ethnic lands signify unpolluted nature and the romantic concept of a "primitive past" (Oakes, 1999). During the rapid modernisation following the opening up of the national economy to foreign investment, the countryside was imagined as the "last reserve of noble virtues", just as similar idealisation, fetishisation and nostalgia characterised tourism to rural Japan in the 1960s during the nation's rapid economic growth (Kelly, 1986, p. 606).

The Guizhou provincial government modelled its cultural development policies off the success of its neighbour, Yunnan Province. The two provinces share similar geographic environments as well as ethnic minority populations. During the first few years of the Chinese economic reform, the two provinces fared similarly in terms of economic development (Donaldson, 2007). A widening gap emerged at the end of the 1990s, by which time Yunnan's ethnic tourism had become a success story. In 2002, the foreign exchange earnings from tourism was US$41.930 in Yunnan, compared to US$7.951 in Guizhou (P. Chen, 2006). The Yunnan provincial government recognised the contribution made to the development of the provincial economy by ethnic tourism.

Since the late 1990s, Yunnan established a cultural brand, “Colourful Yunnan”, to highlight its many ethnic cultures and to promote various cultural activities, including ethnic arts/crafts and performances involving ethnic songs and dances (Chow, 2005). These activities are held in a way that displays and showcases ethnic minority culture as though preserved in a cultural heritage museum (Denton, 2014). Yunnan Province has been highly successful in establishing and expanding the regional culture industry, which centred on the culture of ethnic minorities as a resource available in the province.

Inspired by and borrowing from Yunnan’s promotion of its culture industry, the Guizhou provincial government also introduced the “Colourful Guizhou” brand in 2005 (Y. Yang, 2005). This brand is designed to integrate various regional resources and each colour of the logo is intended to represent different aspects of Guizhou Province. Green represented its natural resources, purple represented ethnic minority cultures, red represented the revolutionary culture of China, and black represented cultural relics and historic sites. In practice, a series of official cultural projects branded with “Colourful Guizhou” were mostly about promoting the province’s ethnic cultures, and the main projects included ethnic dancing and singing performances, photo contests based on the theme of ethnic culture, and ethnic traditional craft competitions (Xue & Li, 2014). According to the State Council Information Office of the People’s Republic of China, “Colourful Guizhou” was successfully registered in 2010 as the first provincial cultural trademark in China (2010). This set a precedence for provincial governments to trademark cultural brands elsewhere. The “Colourful Guizhou” brand is used to promote all aspects of Guizhou’s cultural industry, including cultural festivals, ethnic tourism, local products and media promotions. Many domestic researchers have observed that the brand of “Colourful Guizhou” represents a dynamic, colourful and

energetic image of Guizhou, which helps create a competitive edge for Chinese tourism and cultural industry internationally (Peng & Liu, 2018; Liu & Nie, 2018; J. Yu, 2014).

Photo 6.1. The "Colourful Guizhou" official branding poster.

Provided by the Guizhou Tourism Department.

In Chapter 5, I explained that during the 1980s, as the tourism industry was beginning to grow, the Guizhou government was inclined to develop tourism based on its natural environment while neglecting ethnic culture. The policy shift to emphasise ethnic tourism in the province was directly influenced by the success in Yunnan Province. Researchers have compared the development of ethnic tourism between Yunnan and Guizhou (Gao et al., 2009; Donaldson, 2007), finding that on the one hand, they share many similarities in ethnic cultural resources, socio-economic conditions, and geographic environment. On the other hand, the consequences of the development of ethnic tourism in the two provinces have been dramatically different because of the ways in which governments structured and promoted it. For example, Donaldson (2007) points out that although both provincial governments incorporated poverty reduction as

a main purpose of tourism development, the effects were different: Yunnan developed a larger rural-based tourism industry, which contributed little to the reduction of rural poverty rates but increased the economic growth in the province nonetheless. By contrast, Guizhou developed a small-scale tourism industry centred on rural villages with the direct participation of local people, of which Miao women's commercial embroidery activities in Butterfly Village serve as a classic example. Although this strategy did not contribute to provincial economic growth as expected, it did reduce rural poverty in targeted villages (Donaldson, 2007). Graburn, however, has a different viewpoint on the strategy taken by Guizhou Province (2018). Graburn believes that the Guizhou government's excessive development on some tourist sites brought about unbalanced regional development, while the Yunnan government's more even promotion of various areas may be worth emulating (for a detailed account of Yunnan's tourism development, see Morais, Dong & Yang, 2006; Walsh & Swain, 2004).

The government's investment in ethnic tourism as a major tool of provincial economic development also shows its shifting attitude towards ethnic culture, which it once viewed as the root of the backwardness that characterised the province. The new appreciation of ethnic culture as a source of economic resources was no doubt enhanced by the central government's new emphasis on the protection of intangible cultural heritage in China, which I will discuss next.

The Development and Protection of Ethnic Cultural Heritage

In 2005, the State Council of the People's Republic of China issued a report entitled *Opinions on Strengthening the Protection of Intangible Cultural Heritage of Our*

Country, which marked the start of the protection of Chinese intangible cultural heritage under the guidance of the central government. Importantly, only some intangible cultural resources were recognised as "national heritage", giving certain resources more prestige and importance over others. The transformation of ethnic and folk cultures into national heritage is not only a process of finding, classifying and protecting chosen cultural practices, but it is also about establishing their legitimacy and significance nationally (Bodolec, 2013). As Wang and Bramwell put it, it reflects the impact of decisions made by policymakers about "the relative priorities at heritage sites given to heritage protection or conservation and to tourism-related economic development" (2012, p. 989). Therefore, the amount of 'national heritage' recognised within a province reflected the central government's high regard for the province's cultural resources, which increased the province's status and profile nationally and among policymakers. As discussed earlier, Guizhou Province had long been on the periphery of Chinese economic, political and cultural landscapes. As new policies were released, Guizhou became ranked among the top three provinces in terms of the number of intangible national heritage sites and customs at 31 out of a total of 518 identified across all of China. Out of the 31 heritage customs in Guizhou, there were 21 ethnic minority cultural heritage customs, among techniques for Miao embroidery and silver ornamentation and the Miao batik skills were all listed.[31] This gave a significant boost to the recognition of ethnic culture with the provincial government, which began re-evaluating it in a more positive light. The director of Guizhou tourism bureau is quoted as below:

[31] For the whole list of "Chinese intangible cultural heritage customs" announced by the State Council of the People's Republic of China in 2006 and the following years, please see Ministry of Culture and Tourism of the People's Republic of China, 2004.

> In the past two decades, we focused on the promotion of natural landscapes. Today, we should realise that Guizhou has some other valuable cultural resources. We need to advertise and promote these resources to establish a brand-new reginal image of Guizhou (Fu, 2008).

Moreover, the Guizhou government aimed to strategically preserve ethnic culture as a means of developing the provincial cultural industry. Ethnic cultural heritage was seen as not only the cultural property of ethnic groups (Brown, 2005), but also a resource to be tapped by the provincial government. For example, the Guizhou Ethnic Affairs Commission and Guizhou Provincial Department of Culture selected 17 items, including crafts, festivals and clothing to represent the ethnic cultures in Guizhou. Jun Wu, the director of the Guizhou Ethnic Affairs Commission, said *in the China Daily*: "The selection was made to promote and preserve the cultures of Guizhou's ethnic groups. We will apply for patents on 17 cultural symbols for the better development of the local ethnic culture industry" (Xu, 2011). As the development of the culture industry and the protection of intangible cultural heritage were carried out simultaneously at the national level, the policy focus became centred on balancing between the development and protection of cultural resources. This influenced policy development at the prefectural level. By the time the Guizhou government had begun to advocate cultural projects branded with "Colourful Guizhou", they had developed a policy named "productivity-based protection". This policy tended to target projects related to ethnic crafts in particular, and aimed at ensuring that the producers of ethnic crafts enjoyed the economic return on their craftwork. The economic benefit was thought to motivate the producer to pass down their traditional skills to the younger generations. In other words, the main purpose of the policy was to guide ethnic minority communities to

practice how to combine commercial development and cultural protection through the idea of "sustainable development" (Sofield & Li, 2011). Once governments came to value ethnic crafts, they became interested in the sustainability, both of cultural traditions as well as this booming economic model.

The emergence of state polices to protect ethnic cultural practices for the purpose of promoting tourism and associated industries have greatly impacted the commercial development of Miao embroidery in Guizhou since around 2000. During this period, sales of family-owned vintage embroideries were largely replaced by those of new embroideries produced as products for tourists. The provincial government encouraged craftspeople to design and produce souvenir products for tourists using ethnic craft techniques and traditional patterns. It offered generous support, ranging from the provision of packaging designs, media advertisements and patent applications to tax exemptions and subsidies to increase the volume of production. The government was also keenly involved in locating and expanding buyers' markets to stimulate the cycle of production and consumption. The state's involvement created and expanded opportunities for ethnic minority craftspeople to take part in the tourism industry.

As one of many initiatives sponsored by the Guizhou government, a craft competition called "Colourful Guizhou: Tourist Commodities and Craftsmen Traditional Skills Competition" has been particularly influential. The government hoped to achieve various outcomes from this competition. It hoped to boost the sense of pride and dignity among skilled ethnic craftspeople, which in turn would encourage the skills to be kept alive and passed on. The competition was conceived of as a platform for ethnic

craftspeople to display their skills and communicate with each other. The government also envisaged that the competition would attract more attention to Guizhou's ethnic minority craft techniques from outside the province. Considerable resources were poured in to create "ethnic craft industries".

Photo 6.2. Participants display their embroidery skills at the 2014 "Colourful Guizhou" Competition.
Photo by author.

As part of its effort to promote ethnic crafts, the government began honouring outstanding craftspeople who were successful in the competition. Various Butterfly Village women benefited from the competition, including Chang Liu as an outstanding example. She participated in the competition in 2011 with a coin purse decorated with traditional Butterfly Village Miao embroidery and won the second prize. After the competition, she was granted a government fund valued at 8,000 *yuan* (AU$1,600). In addition, she was also elected by the government to be the representative of Butterfly

Village's Miao embroidery practice. Following this, the Guizhou Provincial Department of Commerce invited and accompanied her to visit Beijing, Shanghai and France to promote her Miao embroidery production for the purpose of expanding the craft as well as improving tourism markets. By the end of 2011, Chang Liu had set up her own company with the help of the government to sell Miao embroidery products as a tourism commodity. Today, the company's annual turnover has reached 240,000 *yuan* (AU$48,000).[32] Along with other ethnic crafts all over China, Miao embroidery has turned into a big business in Guizhou province. The commodification of Miao embroidery was strongly guided by the governments at different levels but, as the active involvement of Miao women demonstrates, ethnic minorities have also played a significant role in the commodification of traditional embroidery as agents of change.

As various researchers have pointed out (Oakes, 2006; Smith, Morgan & Meer, 2003; Sandell, 1998; Newman & McLean, 1998), although the protection of ethnic culture has mainly fallen under the authority of the central and provincial governments, it has brought the power of "shared authority" to marginalised ethnic communities in the form of their ability to negotiate how and what to protect among their collective cultural resources and heritages. This very much applies to the case of the Miao in Guizhou. Miao women possess complex embroidery techniques and a unique aesthetic style; they can dominate the production of this ethnic craft. This unique position creates a space where the women can assert their agency to communicate and negotiate the protection of Miao embroidery with local and central governments. Drawing on his ethnographic

[32] This data came from my interviews with Chang Liu and Wan Tang (the financial manager of the company).

fieldwork during the establishment of an eco-museum with three ethnic communities in Guizhou, Nitzky explains that “cultural heritage has become as a powerful and contested site for community engagement” (2013, p. 206).

The provincial government promoted the ethnic craft competition not only to develop the culture industry, but also in their attempt to influence the kind of crafts produced and the methods of production. In supporting Miao women’s production of embroideries as a tourism commodity, the Guizhou government emphasised that producing a tourism commodity is a much more sustainable economic endeavour than selling family-owned vintage embroideries. The government’s aim was two-fold. First, it sought to remould Miao women’s commercial awareness. As discussed in Chapter 5, Miao women first developed a commercial awareness related to their practice in the 1980s. One of the unintended consequences was the loss of high-quality vintage embroideries to foreign collectors, about which the government had been highly concerned. The government was unable to ban sales of inherited embroideries outright as they were private property and because they also recognised the fact that selling embroideries had by then become an important source of livelihood for many Miao households. By promoting the production of new embroideries by means such as the craft competition, the government attempted to protect and expand the production of Miao embroideries as a tourism commodity, without further damaging the prospects of the vintage embroidery market.

The Industrialisation of Miao Embroidery Production

Government intervention into ethnic craft market activities increased the commodification of Miao embroidery in Guizhou. However, policymakers and state authorities were not the only influential actors. Miao women had begun organising themselves not only to participate in such market activities, but actively shape them. The issue of minority community participation in tourism development has been widely discussed in Western academic literature (Su et al., 2016; Sdrali, Groussia & Kiourtidou, 2015; Shani & Pizam, 2012; Saarinen, 2011; Robinson & Smith, 2006). Scholars generally agree that local participation empowers host communities by turning them from passive subjects of the "tourism gaze" into active agents to ensure that the community enjoys socio-cultural and economic benefits. However, some researchers argue that active community participation is difficult to achieve in practice (Salazar, 2012; Tosun, 2000; Timothy, 1999; Braden & Mayo, 1999; Joppe, 1996). For example, community members are often ill-equipped to engage in local tourism development, as they are constrained by insufficient capital, resources, skills and knowledge (Scheyvens, 2003; Sofield, 2003). The highly centralised public administration in some developing countries also results in a low level of community participation (Cole, 2006a; 2006b; Tosun, 2000). This is especially evident in China, where the central and local governments predominantly control the planning and operation of tourism to achieve export-led industrialisation at the expense of local residents and their needs (Wang et al., 2010; Ryan & Gu, 2009; Bao & Sun, 2007).

Miettinen (2010) and Richards (1999; 2000) argue that the non-participation or passive participation of locals is particularly common in crafts tourism. Here, crafts tourism

loosely refers to tourists' experience of local culture through observing, buying, and learning about local crafts. One main reason for hindered active participation is that "craftsmen were suffering from a lack of business and marketing skills, and many of them were lacking professional training" (Miettinen, 2010, p. 164). Taking textile crafts tourism in Lapland and Crete as examples, Richards (1999) argues that local craftsmen lack adequate understanding of tourists' needs, an effective organisation of their labour force, and access to distribution channels. However, as I will explain in the following section, Miao women have spontaneously established and operated two methods of tourism-oriented embroidery production—handmade embroideries through the putting-out system, and machine-made embroideries via factories—that emerged as a result of their increasing ownership of the process of the commodification of their traditional ethnic practice. Further, their involvement has systematically expanded the Miao embroidery market, demonstrating their ability to promptly gain marketing knowledge and put it into practice without any training from governments or the guilds. Their successful promotion of Miao embroidery not only relies on their exclusive possession of the embroidery production techniques, but also the ways they have influenced the costs of embroidery products, the quantity and the styles of embroideries produced, and their circulation in the Miao embroidery industry they have helped build.

The Emergence of the "Putting-Out" System

In this section, I will explain the emergence of the putting-out system that produces brand new handmade embroideries as tourist commodities. These handmade embroideries typically include decorative picture frames, handbags and home decoration items, and their prices range from 20 *yuan* (AU$4) to 200 *yuan* (AU$40). At present, handmade embroideries dominate the market, accounting for about 70% of

total production.[33]

An increasing number of women in Butterfly Village who used to collect and resell old embroidery pieces have moved on to produce and sell newly produced embroideries. The tourism market has required more and more handmade embroidery pieces, but Miao women in Butterfly Village became aware of the need to balance the expansion of the embroidery market and the protection of high-quality vintage embroideries that remain in the province. As a workaround, they developed strategies to shift their commercial practice to producing and selling newly produced embroideries in the tourism market. This would ensure that inherited and family-owned vintage embroideries could be preserved, while they continued to provide sources of income to Miao women who had come to depend on the embroidery business for a living.

There were three distinct groups of consumers creating a strong demand for hand-embroidered products: 1) domestic and international tourists visiting Guizhou whose primary interest in Miao embroideries was purchasing souvenirs or gifts; 2) Guizhou government institutions and some state-owned enterprises and public institutions who considered Miao embroideries suitable gifts to foreign dignitaries as embodiments of Guizhou's cultural characteristics; 3) companies running businesses in the ethnic craft market in Guizhou, Zhejiang and Guangdong provinces, which would purchase semi-finished, often very small embroidery products to reprocess and then sell to tourists, or

[33] This data came from my interviews with merchants and intermediaries in Butterfly Village, governmental officials in the Guizhou Commerce Department and Guizhou Tourism Department.

export to ethnic art markets in Southeast Asia, Japan, Europe and America. Consumers often preferred hand-embroidered products because, as various scholars have pointed out, people who are accustomed to urban industrial environments yearn for the idealised and nostalgic image of a simple life in nature (Cohen, 2000; Errington, 1998; Brian, 1986). They tend to characterise machine-made products as cold and artificial, evoking the imagery of the assembly lines devoid of aesthetic appeal and 'culture'. Patrick Frank captures this tendency by stating that mechanical production "severs them [crafts] from their places in the fabric of tradition and thus erodes the aura of originality, uniqueness, and permanence which attended them at first" (1989, p. 29). By contrast, collectors and high-end purchasers highly value handmade products for their supposed simplicity and tradition, representing both the skills and the labour of craftsmen as well as embodying their emotions and beliefs (Kaewla, 2017; Luckman, 2015; Littrell, Anderson & Brown, 1993). That is, this type of products gives tourists the "connection between truth, intimacy and sharing the life behind the scenes" (MacCannell, 1976, p. 95). In a nutshell, tourists from urban areas, government officials and merchants all associated handmade embroideries with authenticity (see Chapter 8 for a discussion of the changing concept of the authenticity of embroidery among Miao women). Miao women with embroidery businesses needed to cater to this demand for handmade products, without having to resort to parting with their inherited vintage embroideries.

Miao women began developing a new supply chain to meet the market demand, as well as the state's policies and their own interest in preserving vintage embroideries. First, women in Butterfly Village mobilised those who had not yet taken part in embroidery businesses. They hired other women to produce embroidered pieces at their homes. This was the beginning of what is called the "putting-out" system in Butterfly Village. The

putting-out system is a form of subcontracting work akin to that which originally emerged as a type of proto-industrialisation in Europe and North America in the nineteenth century (Kemp, 1985). While the exact organisation differs, similar systems have also commonly been found in various locations and historical times, leading some to argue that it may be a recurrent and enduring feature of capitalist production (Littlefield & Raynolds, 1990). Primarily involving merchant employers, intermediaries and producers, the basic organisation of the putting-out system is as follows. First, merchant employers or intermediaries sign contracts with producers and supply raw materials. Second, producers complete orders at home or in their small-scale workshops. Controlling the supply of raw materials as well as the market of end products allows merchant employers to bring the production under the control of capital.

The putting-out system is not a production mode unique to handmade embroidery in Butterfly Village, but is widely spread over present rural societies in China. For example, a large scale putting-out system is commonly found in coastal provinces (Fu, 2014). The putting-out system also played a significant role during the development of China's ethnic craft industry, and transformed the production of silk, lacework and straw hats (Peng, 2002). The system has also played an important role in China's gradual transformation as a market economy since the policy to open the nation to foreign investment (Nee, 1992). Through the commodification of labour power, China has become a global manufacturing centre (Sung, 2007). Historically, the putting-out system diversified during the late Ming and the early Qing dynasties to develop the production and sales of cotton-textile products (Myers, 1965). This diversification changed the way machines were delivered and credit was used for sale of raw material (Qiu, 2002). Academic debates regarding the putting-out system during this important

period focused on two aspects: the class relationship between producers and merchant employers, and the productivity of the system (Ruan & Zhang, 2009; Crossley, 2007; Myers, 1974; 1991). However, Fu Chunhui (2014) has criticised that these discussions lacked a holistic perspective and failed to consider non-economic aspects of the system, including issues of ethics and social contexts. He suggests other elements be considered, such as the social hierarchy and family backgrounds of merchant employers, intermediaries and producers, the social network and relations of different agents, and the influence of kinship system on the putting-out model. The putting-out system is not only a production system, but links to complex and ubiquitous social connections (*Guanxi*) in China (Gold, Guthrie & Wank, 2002). This means that it affects the relationship between the employer and the employee, which in turn affects the social order within the village community.

In the context of Butterfly Village, the putting-out system was primarily about handmade Miao embroidery production. Merchant employers are comprised of Miao women in Butterfly Village who are in charge of product sales as well as companies dealing with ethnic crafts for tourists. The intermediaries are Miao women in the same village who accept orders from the companies run by the merchant employers. The producers are other Miao women in the village who produce embroidery pieces. As I will discuss in more detail below, the merchant employers come from more privileged backgrounds than the intermediaries, whereas the producers are usually poor and without assets or cash to invest in businesses. The production flow is as follows. First, the merchant employers sign contracts with intermediaries to stipulate the number, scale and pattern styles of embroidery pieces. The intermediaries then buy raw materials, such as silk thread, fabric and needles to supply to producers, and they set production

deadlines. Producers complete the orders at home, and the intermediaries inspect the finished products and pay the producers accordingly, before delivering the pieces to the merchant employers. Women in Butterfly Village call this production cycle a "company and peasants (*gongsi jia nonghu*)" mode of production.

In ordinary circumstances, one of the most significant challenges in setting up the putting-out system is for merchant employers and intermediaries to establish access to a sufficient number of qualified producers (Cook & Binford, 1990; Cook, 1984). Aspiring producers usually receive professional training in production skills. As Cohen Jeffrey (2001) points out, entrepreneurs prefer to hire skilled workers with the ability to complete assignments in a speedy fashion, in order to avoid the economic loss from rejected products. Moreover, entrepreneurs invest a great deal of energy and time to train workers in skills needed for production. For intermediaries and merchant employers, it is an onerous task to organise training for rookies, examine their skills and schedule production according to the competence of the producers on the whole.

However, a distinct characteristic of the putting-out system involving Miao embroidery is that the training of production skills was unnecessary, for most Miao women in the village were already well versed in the necessary skills to produce embroidery. I once followed a Miao woman who acted as an intermediary during her round to distribute silk threads to producers. She handed several dozens of coloured threads to one producer and agreed on a delivery date. On our way out, I asked her why she did not provide the producer design patterns or methods for colour blending. Her answer was brief and matter-of-fact: "They know. They have embroidered for years, and are very

skilled." The skills Miao women in Butterfly Village have cultivated since childhood turned out to be a highly useful resource for becoming qualified producers of commodified embroidery pieces under the modern capitalist economy. The presence of Miao women as skilled ethnic craft producers was crucial for the establishment of the putting-out system and its rapid expansion in a relatively short period of time.

It has also been observed in other contexts that the putting-out system intends to depend on the presence of skilled ethnic minority workers. Examples include: woollen textile production in Central Oaxaca, which has stimulated the development of Mexican tourism (Cohen, 1998); the Mola, a handmade textile of the Kuna people, produced and sold in San Blas, Panama (Stephen, 1991); and the organisation of piece-worker networks among Zapotec weavers in the Southwestern United States (Wood, 2000). All these putting-out systems have been built on the evolution of a self-managed economic network among minority groups. The examples demonstrate that ethnic minorities worldwide have used their culturally acquired skills and ethnic social cohesion in an attempt to gain control over the commercialisation of their ethnic crafts (Stephen, 1991).

For Miao merchant employers and intermediaries, the advantage of the putting-out system in the embroidery industry is that it significantly reduces operational costs. They are able to adjust the production scale according to market trends and alter the number of producers according to sales figures. They can also circumvent the need to rent production plants and hire employees on a contract. The risk of overstocking is also non-existent. These benefits greatly reduce financial stress and investment risks for these two groups of Miao women. For producers, home production allows flexible

labour to balance work and family life. They embroider at home while taking care of children and doing house chores. Moreover, they have the freedom to stop production during busy farming periods, or when better job opportunities arise. Therefore, even though working outside the home may bring a higher income, many Miao women in Butterfly Village still choose to embroider at home to meet the demands of farm work and reproductive labour. The putting-out system allows certain flexibility for all three groups of Miao women to avoid financial losses.

However, the putting-out system has some drawbacks. For merchant employers and intermediaries, the main problems are quality control and missed production deadlines. Because producers are paid per embroidery piece, they tend to prioritise the speed of production rather than the quality of outputs. Producers may also fail to complete the order on time or miss deliveries altogether, due to the simultaneous demands of home responsibility and farm work. For producers, the main disadvantage is the meagre income for time-consuming work. Typically, a producer spends four-to-five hours completing an embroidered piece that is 10cm x 10cm using the simplest technique, for which she would be paid just 10 *yuan* (AU$2). Some women in the village who had experience working in textile factories in urban areas as migrant workers complained that they could earn five times more for the same time and effort elsewhere.

The data obtained during my fieldwork clearly shows that the putting-out system has created a significant income gap between the women who work as merchant employers and intermediaries, and those who work as producers. The producers were at the bottom of the embroidery production chain, while the intermediaries earned significant income.

At the time of data collection, the profit for intermediaries was 10–15 *yuan* (AU$2–3) per embroidery piece, and the average quantity of a single order was about 300 pieces. This brings profits of 3,000–4,000 *yuan* (AU$600–900) per order. Although the market demand for Miao embroidery is unstable, an intermediary receiving five or six orders each year on average would make an annual profit of approximately 20,000 *yuan* (AU$4,000). At the top of the production chain are merchant employers, earning between 30,000 to 50,000 *yuan* (AU$6,000–10,000 AUD) each year.

Photo 6.3. A common handmade embroidery tourism souvenir.

The price was 120-150 *yuan* ($24-30 AUD).

Photo by author.

Photo 6.4. A mountain of handmade embroidery in an intermediary's home.

Photo by author.

The income disparities among Miao women in the putting-out system reflected their family backgrounds and previous commercial embroidery experiences. The merchant employers were the most privileged. Most of them were either or Second-Generation Buyers who found commercial success in the early period of the development of the embroidery industry (see Chapter 5 for the different types of women's embroidery businesses). They accumulated the necessary capital and developed business networks with various collectors and businessmen, both domestic and foreign. Most businessmen preferred to work with familiar Miao women, and introduce these women to other businessmen. Moreover, these women or their families often had political connections with the local governments, which provided them with business opportunities to collaborate with government institutions and some state-owned enterprises. Therefore,

the merchant employers have rich domestic and international market resources to mobilise in order to gain a considerable volume of orders for embroidery products. The intermediaries were comprised of two types of Miao women. The first group tended to be those who were Second-Generation Buyers with enough cash and social networks to set up their businesses as intermediaries. This was a more secure option financially, as they lacked sufficient funds to absorb potential risks of undelivered orders or weathering tough economic times. The second group were rich relatives of merchants who had funding supports but limited business networks. This made them dependent on powerful merchant relatives to run embroidery businesses. Lastly, the producers were predominantly poor and without assets or cash to invest in embroidery businesses or sales activities. All they had to sell was their skilled labour. These observations demonstrate that the putting-out system has exacerbated existing patterns of inequality among Miao women within Butterfly Village.

The Rise and Expansion of Machine-Embroidery Production

Machine-made embroideries emerged in the early 2000s. Generally, Miao women in Butterfly Village sneeringly refer to them as ‘ghost-made’ and ‘dad-made’, in contrast to ‘human-made’ and ‘mother-made’. However, they use machine-made embroidery to replace handmade embroidery under certain circumstances. Much literature examining commercial ethnic craft production focuses on its impact on the local economy, ethnic identity, gender relations, and social stratification (Sheikhi, 2015; Colin, 2013; Bankston & Jacques, 2000; Li & Hinch, 1997). Little attention, however, has been paid to the relations between the producer, their craft and other aspects of their traditional practices. As Daniel Miller points out, “things make people just as much as people make

things" (2010, p. 135). Miao women's partial acceptance of machine-made embroidery exemplifies how economic incentives and the emergence of new livelihoods and cultural aspirations alter the relationship ethnic minorities have with their own culture.

One major factor that incentivised the social acceptance of machine-made embroidery was that it offered a practical solution to the difficulty of keeping personally owned vintage embroideries clean while they are used in heavy rotation for tourist entertainment. As one of the most popular ethnic tourism sites in Guizhou, Butterfly Village is adept at entertaining tourists by performing Miao songs and dances on stages and at halls near the village entrance, treating tourists with rice wine toasts, and dazzling them with embroidered and silver ornaments. During festivals and public holidays, the prefecture government demands that Miao women wear their traditional dresses to project an "appealing" image to the visitors. Many Miao women themselves are keen to increase the sales of their embroideries by dressing in an attractive embroidered jacket to gain attention. The hustle and bustle of the peak tourist season was similarly evoked by Chio who, while observing in two Miao villages in Guizhou, noted that the women "dress themselves to look exotic and ethnic … and adjust their own schedules to make sure to be there, looking good, when the tourists arrive" (2014, p. x).

As tourists immerse themselves in this colourful Miao world, some of them hold local women's arms or their shoulders to pose for photos. Others curiously touch the smooth surface of the embroidered jackets. Some even ask whether Miao women can take off their jacket so that they can wear it for a Miao-style "costume" photoshoot. The increased tourist activities in the early 2000s and the rough handling of handmade

embroidery dresses that the women wore deteriorated their quality, which alarmed the women. Longhua, a Miao woman in her mid-thirties, said in good faith: “I am willing to show [tourists] my handmade embroideries and it is OK if they just take pictures. But they always touch the surfaces with dirty hands. Our embroidered clothes can’t be washed because the colours will fade. One of my jackets has become very dirty and worn out, and now I put it at the back of my market stall.” Another Miao woman jumped in our conversation and responded to Longhua, saying: “You haven’t seen the worst of it. Once I had dinner with tourists, and a drunk man puked all over me! My jacket was completely destroyed.”

In order to prevent such fiascos and to protect their assets, most Miao women have come to rely on machine-embroidered clothes. This was done with the safe knowledge that most tourists are incapable of spotting the difference between handmade and machine-made embroideries. The main difference between the two production methods is the required skills and the presence of embodied techniques. But to the untrained eye, the finished products are similar, because most machine embroideries copy the patterns and colours of existing handmade embroideries. Embroidery designs are something Miao women have collectively created and inherited through generations, and now liberally use to industrialise production for the new economy. The women consider this a win-win situation. The tourists continue to enjoy not only Miao culture, but also the hospitality and generosity of the locals. Miao women secure their livelihoods and profits by continuing to interact with tourists in proximity without the risk of ruining their high quality, hand-embroidered clothes.

Minority ethnic groups show both willingness and reluctance when they display their ethnic clothes and jewellery for the enjoyment of tourists. On the one hand, ethnic minorities take advantage of the external perception of their culture as a resource, and seek to capitalise on it in the tourism market (Su et al., 2016; Doorne, Ateljevic & Bai, 2003). It also brings them immense pride to know their culture has been not only accepted but embraced by local and central governments and various outsiders (Gladney, 2004). On the other hand, they are pressured to present their culture on terms set by the commercial and political interests of those who exercise power over them, such as state officials and cashed-up tourists (Yang, Wang & Smith, 2008; Snellman & Ekehammar, 2005). One obvious alternative to wearing machine-embroidered clothes would have been to stop routinely wearing embroidered clothes for tourists. After all, most ethnic minorities today do not wear traditional clothing in daily life (Zhao & Postiglione, 2010; Upton, 1995). However, Miao women are compelled to visually present themselves in ways that respond to the stereotypical image of them expected by ousiders as "colourful and exotic" people (Murakami, 2008, p. 64). Many researchers indicate that Chinese popular culture, mass media and government promotional material frequently portrays ethnic minorities in colourful ethnic costumes (Mann, 2011; Baranovitch, 2010; Blum, 2001; Schein, 2000). Such a visual presentation, along with other stereotypical cultural markers like customs, festivals and architecture, serves as the evidence of cultural diversity in China, provides tourists with the 'ethnic colour' that they expect to see (Chio, 2014; Harrell, 2001), and justifies the contrast between the modern and advanced Han as the ethnic majority with the traditional and backward ethnic minorities (Mullaney, 2011; Gladney, 1994). Hence, traditional ethnic dresses signify the exotic Other and create a cultural and social space in which outsiders' desires can find concrete expressions of the imaginaries that they depend on to uphold their self-identities as modern and urban citizen-consumers. The value attached to Miao

ethnic crafts is inseparable from the Miao's ability to satisfy these imaginaries.

Demands for machine-made Miao embroideries as affordable souvenirs were immense, especially among female tourists, and this has encouraged further production. Typically, machine embroideries are coasters, wallets and decorative picture frames priced between 2 *yuan* (AU$0.4) to 40 *yuan* (AU$8). As Anderson and Littrell elucidate, "textile craft souvenirs prompted tourists to contrast trips with everyday experiences, to expand their world view, to differentiate the self from others, and to sample authentic cultural life" (1995, p. 330). According to Littrell, a certain segment of the ethnic craft market would continue to purchase handmade textile crafts as a marker of cultural authenticity (1990). Those buyers, many of them collectors, continue to visit Butterfly Village, seeing value in the manual work and skills involved in embroidery production. However, the majority of tourists are attracted to the rich patterns and diverse colours of Miao embroideries, just like the ones Miao women wear. Among such consumers, machine-made embroidery is more popular, as they, too, value its affordability and durability just as Miao women do. Factory-produced embroideries still have the same basic aesthetic characteristics of traditional Miao embroidery but are typically small items, which makes them suitable for bulk buying as souvenirs. The needs of Miao women to preserve their handmade personal embroideries has matched with tourist demands to popularise the machine production of Miao embroidery.

Photo 6.5. Machine-made embroidery letter bags.

The piece costs 50 yuan (AU$10).

Photo by author.

Given the increasing demand for machine-embroidered clothes and souvenirs, businesses have sprung up in Butterfly Village to produce, distribute and sell them. It is difficult to precisely state the exact year the first factories were established, as available official records and scholarly publications do not provide this information. However, according to the villagers' accounts, there were just a couple of individually owned workshops in Kaili, and none within the village in the late 1990s. This increased

to three-to-four semiworks by 2000, and by 2012 approximately 16–17 factories in the village, as well as 30-40 more in Kaili, all of which were large enough to produce quantities to develop a new market, but not yet full-scale commercial plants. Since then, the number of semiworks has mostly remained stable.

The expansion of machine embroidery production was aided by the provincial and prefectural governments, which offered a rage of preferential policies and subsidies to Miao entrepreneurs who ran small-scale machine-made embroidery businesses. This was part of the implementation of several top-down state policies and strategies in areas with high concentrations of ethnic minority populations. Other policies included bilingual education and a focus on the development of minority education (Leibold & Chen, 2014; Postiglione, 2014; Hansen, 2011; Tsung, 2009; Zhou, 2001), the introduction of high-yielding and profitable crops, the development of farm machinery manufacturers and the provision of modern agricultural technology and training in ethnic minority areas (Yang, 2012; Sturgeon, 2010; Waldron, Brown & Longworth, 2006), and accelerated rural-to-urban demographic transition (Gaetano & Jacka, 2004). As discussed in Chapters 1 and 3, the Chinese government has integrated ethnic minority groups into the national economic, social and cultural development plans over the last few decades. It is the legal obligation from the central government that higher-level state organs help minority areas accelerate their development (Information Office of the State Council of the People's Republic of China 2009).

Importantly, the government has encouraged people from ethnic minorities to adapt to the market economy and grasp new economic opportunities brought about by the promotion of ethnic tourism (Heberer, 2007; Gustafsson & Shi, 2003). For example,

“supporting ethnic trade” and “offering tax and other financial incentives to the development of traditional ethnic handicraft industry” were listed on China’s Eleventh Five-Year Plan for Ethnic Minority Affairs (Communist Party of China of the People's Republic of China, 2008). There was a clear rationale; as more minority people realised the commercial value of their traditional culture, they would further develop a “self-confidence and commitment required to safeguard their cultural identity and distinctiveness” (Yang, Well & Smith, 2008, p. 767). The national and local governments encouraged minorities to produce ethnic souvenirs and cultural products, which was supposed to contribute to both economic and cultural development. This move created jobs and sources of cash income in regions with ethnic minorities and, in the process, it has also taught ethnic minorities how to engaging in commercial practices and gain an “understanding of modern commerce, expertise in enterprise management, and even an entrepreneurial spirit” (Oakes, 1998, p. 136). Responding to the thriving market of local ethnic crafts and also following the instructions of the central government, the Guizhou government showed political enthusiasm for encouraging and supporting ethnic minority craft enterprises. In terms of the Miao machine-made embroidery industry, all levels of governments and various official institutions provided different types of measures to stimulate self-employment and small-scale businesses for Miao entrepreneurs.

The following table shows the main types of government support given to Miao entrepreneurs in the embroidery industry. The information draws from my interviews with representatives of the relevant government organisations.

Table 6.1. Favourable government supports for Miao entrepreneurs.

Government organisations	Preferential policies and measures
The Guizhou Commerce Department and Guizhou Small and Medium Enterprise Bureau	1. Providing subsidies to Miao enterprisers: 30,000–50,000 *yuan* (AU$6,000–10,000) 2. Providing individual Miao entrepreneurs training in marketing 3. Providing interest-free loans to Miao people who need initial funds to launch embroidery businesses.
Guizhou Provincial Department of Finance	1. Tax exemptions for the first three years 2. Tax breaks—the standard corporate income tax rate is 25% in China, while the Miao enterprise income is levied by 10–15% of tax rate.
Guizhou Provincial Department of Culture	Giving priority to Miao entrepreneurs and their embroiderers in governmental purchase of Miao embroidery as gifts to foreign dignitaries or to outfit ethnic culture performances.
Village government	Assistance in registering personal information and filling required paper forms.
Prefectural government	Providing free services by registered agents to help with business registration procedures.

With the involvement of and support from various governmental organisations, the process of setting up a small factory is efficient and convenient. First, Miao people provide the village government basic personal information, such as their ID card number, the type of Miao embroidery business they want to set up (handmade or machine-made), and the location of their factory. Next, the village government prepares all the paperwork for applicants and submits it to the prefectural government. Then, the prefectural government send registered agents to obtain approvals from various local institutions (including the Public Security Department, the Fire Department, the Quality

and Technical Supervision Bureau, the Commerce Department, the and Department of Finance). Once the applicants have been registered, the prefectural Commerce Department issues a business license. The Prefectural government then submits a copy of the business license to the GSMEB for subsidies. During an interview I held with Hui Huang, the director of the GSMEB, he humorously remarked that Miao entrepreneurs "give us words, we return with deeds."

The Miao in Factory Production of Embroideries

The emergence of factory-based embroidery production in Butterfly Village occurred organically at the grassroots level in its early stages. Liuyu and her husband Feng were some of the early starters. Liuyu worked at a Han-owned factory in Guangzhou between 1998 and 2000, when the city had become one of the largest manufacturing and commercial hubs nationally off the back of the opening up of the Chinese economy. The factory Liuyu worked in manufactured textiles with modern embroidered patterns, and this was where she observed a growing demand for machine embroidery firsthand. She returned to Butterfly Village in early 2001 and, after consulting her husband Feng, Liuyu decided to build a small-scale factory of her own. They invested most of the savings they had accumulated, including all the money Liuyu made from the manufacturing job in the city. Feng was keen to try his luck as an entrepreneur, so that the couple could stop working for others. Using Liuyu's extensive social network, they bought two old embroidery machines from her former employer in Guangzhou, two new sewing machines, and two computers to scan and copy traditional patterns of handmade Miao embroideries. After some difficulties, Feng eventually found a Han graduate student from a junior college in Kaili who could draw computerised colourful patterns, a key role early in Liuyu's venture. Liuyu also recruited five Miao women

from nearby villages whose eagerness to be hired came as a surprise for her. The startup of their business also greatly benefited from a government grant of 3,000 *yuan* (AU$600). Reflecting on their trajectory, they felt they made a good decision to establish their small-scale business. Liuyu explained:

> Most of my relatives and friends thought it was a risky attempt, as none had experience in business. But we were confident. I already knew the production processes from my factory job. My husband was good at communicating with Han people, in his fluent Mandarin. The government offered us a lot of help. We were fortunate that the gamble has paid off.

The following flow chart presents the typical process of the machine-made embroidery production, which I developed based on interviews and participant observation of factory owners, workers and designers at Miao embroidery factories in Butterfly Village and Kaili. There are three main production stages: designing embroideries using computer software, setting up and executing the automated embroidery process, and adding finishing touches by using sewing machines, such as hemming pieces. Normally, the computer-based tasks were undertaken by Han designers who had graduated from art colleges. The sewing machine jobs were completed by Miao women from Butterfly Village and other villages nearby.

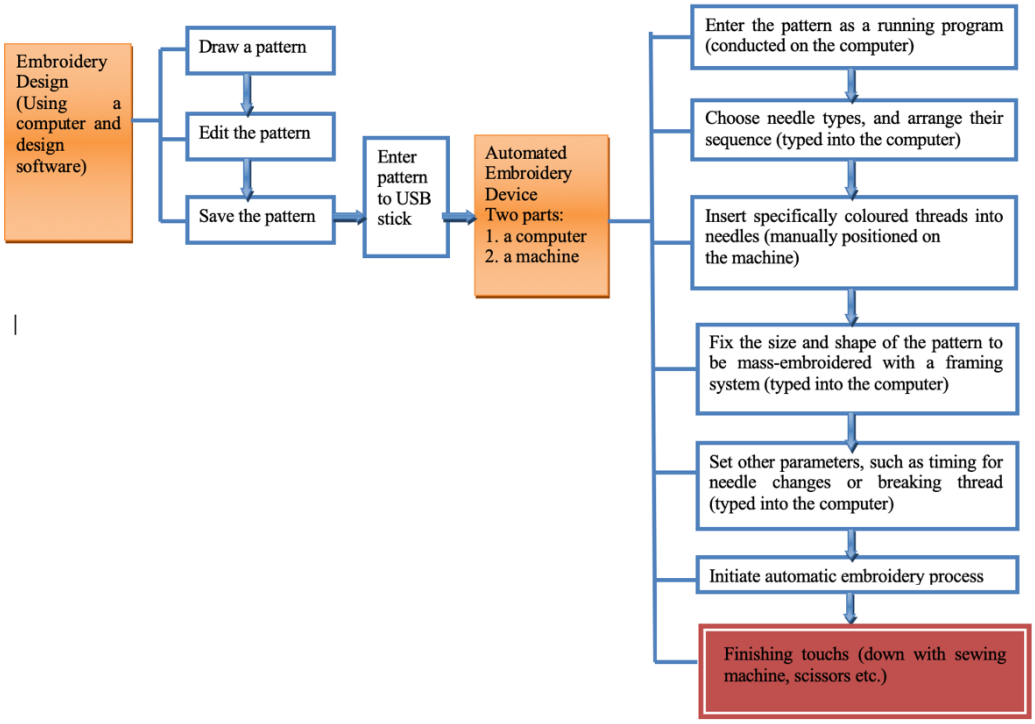

Figure 6.1. The production process of a computerised machine embroidery.

Drawn by author

The new small-scale manufacturing industry differentiated the values of labour provided by different groups of workers. Liuyu's business practice is illustrative. She paid 800 *yuan* (AU$160) to each of the five Miao workers, and 2000 *yuan* (AU$400) to the Han designer, reasoning that the design was a skilled job while machine sewing was simple and routine. For the Miao workers, the wage was less than what they could earn in cities as migrant workers. However, the close proximity of Liuyu's work to their home allowed them to balance home duties and paid employment without having to leave their villages, and for them this made up for the wage difference. Factory-based embroidery production created an avenue for Miao women to making a living out of embroidery businesses as an alternative to the putting-out system.

Rural-to-Urban Migration and Factory-Based Embroidery Production in Butterfly Village

My interview findings have revealed that, like Liuyu, most Miao entrepreneurs in machine-embroidery businesses in Butterfly Village are former migrant workers. As mentioned in Chapter 2, tens of millions of rural people have poured into cities to seek employment and small business opportunities since the late 1980s. This followed the implementation of the "reform and open up" national economic policy and the reform of the Chinese household registration system, which first started in large cities and provinces such as Beijing, Shanghai and Zhejiang in the 1980s, and then gradually extended to other provinces over the following 20 years. Guizhou Province began to implement its own registration system in 1996 (Zhang, 2011). Since the late 1990s, Miao men and then women have increasingly streamed into urban regions in search of wage work. My embroidery master recounted the early years of the rural-to-urban migration out of Butterfly Village: "Except the old and the sick, everyone went to cities to find jobs. The whole village nearly emptied out. Most agricultural land was barren because no one did farm work, not to mention continue embroidery." Her account is supported by the statistical data on the population growth rates among the Miao in China between 2000–2010.

As shown in Figure 6.2, between 2000 and 2010 Miao population growth was positive nationally, and the growth rate surpassed 100% in provinces where large and export-oriented manufacturing sectors attracted Miao and other migrant workers. In Guizhou Province, where about half of China's Miao people lived, the population growth was negative. These figures demonstrate the great eastward migration of Miao people from Guizhou to urban economies in the first decade of this century. In the 2000s, ethnic

minority migrant workers had returned to their villages in droves in order to take advantage of new opportunities created by government policies for economic development in ethnic minority regions (Démurger & Xu, 2011; Ge, Resurreccion & Elmhirst, 2011).[34] Guizhou Province was no exception, and the steady return migration of Butterfly Village residents became the main actors in the creation of the manufacturing industry that produced machine-made Miao embroideries.

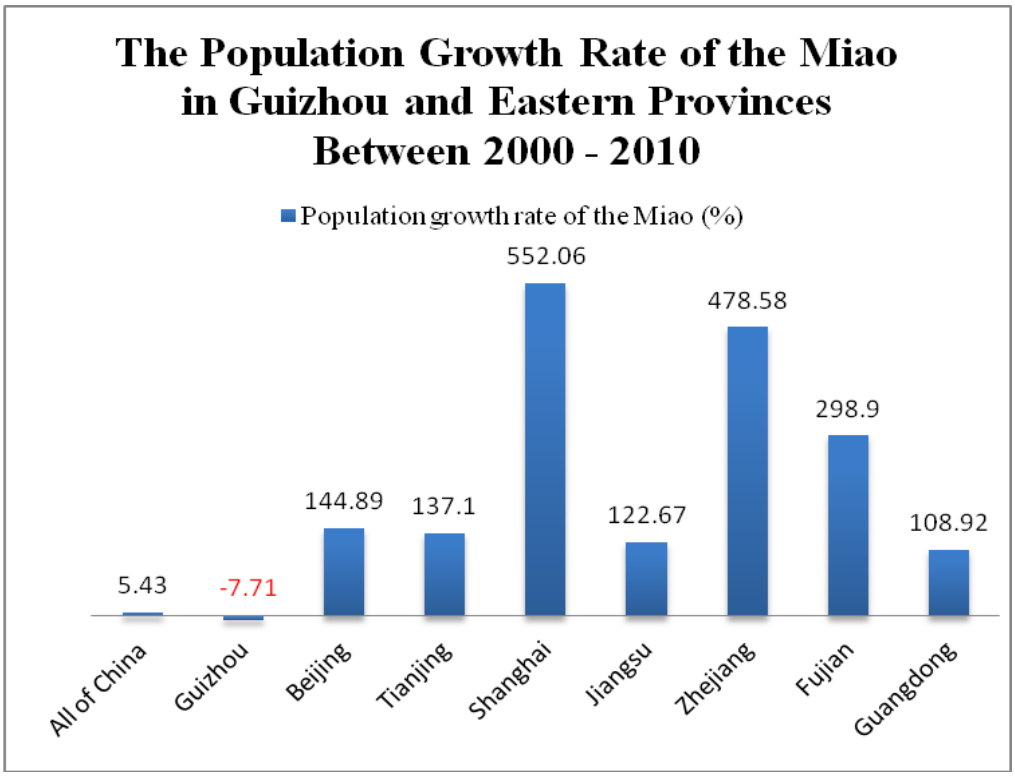

Figure 6.2. The population growth rate of the Miao in Guizhou and Eastern Provinces between 2000–2010.

Drawn by author

[34] The migrants needed to return to their hometowns to benefit from government subsidies and other forms of support because "ethnic-related policies in China were designed and implemented to target ethnic regions rather than ethnic minority groups themselves" (Wu & Wang, 2012, p. 502).

Recent literature on the rise of rural entrepreneurs in rural China has pointed out that migrant workers have been able to accumulate financial, social and human capital and have enhanced their entrepreneurial abilities in the process (Yang & Wall, 2008; Mackerras, 2005; Waldinger, Aldrich & Ward, 1990). In contrast to those Miao women who began trading their vintage embroideries due to dire poverty and economic necessity, these former migrant workers had prior experience of wage labour in manufacturing, knowledge of machine-made embroidery production, and cash to invest in a new venture. They were well-placed to take advantage of government subsidies for self-employment and ethnic enterprises in the tourism and cognate industries.

Becoming one's own boss was not only about making profits, but also creating dignified working conditions for themselves. Yuqi worked in various jobs as a factory hand, waitress and cleaner in Guiyang between 1999 and 2002, and started her embroidery business back in the village. Even though she would have earned more as a wage earner in a larger city, she was fed up with the exploitation, abuse and humiliation she experienced as a Miao migrant worker at the hands of Han employers, who would underpay and fire her without due process. Yuqi bitterly recounted the mockery and hostility she endured for three years:

> I paid a large price to earn cash in Guiyang. I worked from 7am to 10pm, taking dirty and tough jobs most Han migrant workers avoided. My Han bosses would call me uncultured and illiterate because I was not fluent in Mandarin. One boss asked me to sing a Miao song for his clients and said minority people should pleasure Han people. Another asked me whether we still lived in caves and made

> fire with sticks. That was ridiculous! When I heard that some in the village were making money by starting their own embroidery factories, I immediately decided to join them, without hesitation.

The emergence of machine-made embroidery disrupted existing power relations among Miao households by providing economic opportunities to less wealthy families. As discussed in Chapter 4, the quality and quantity of embroidered clothes owned by Miao women signified their family's economic status. Therefore, only those who were already wealthy and had a powerful status in the village had capital to sell their handmade embroidery and collect embroidery made by others. In contrast, entrepreneurs in machine production came from middle-to-low-income earning families. They accumulated modest economic, cultural and social capital as labour migrants in cities, which they could convert to new forms of capital through the industrialisation of Miao embroidery production back in the village. That is, machine production made embroidery businesses more accessible to a greater number of Miao people. This, in turn, brought about greater economic power and social status among more Miao entrepreneurs.

The Miao entrepreneurs who were in the putting-out system tended to stay away from the manufacturing businesses. Instead, they would invest their profit in properties, construction of infrastructure and other fields that required investment capital. In the meantime, those in manufacturing businesses would expand their operations by opening more factories. The separation of the embroidery industry into two markets—one for handmade and the other for machine-made products—created distinct opportunities for Miao women from variously privileged and marginalised statuses.

However, the competition was fierce among machine-embroidery businesses. Those who started businesses early in the 2000s gained “first-mover advantage” to increase profit margins and keep their small businesses growing. The first batch of entrepreneurs acquired a 40–50% market share in the village. Moreover, many businesses had gained a monopoly-like status in tourist markets. In 2002, the couple Wu and Zhu began producing and selling machine-made embroideries at a local market during the peak of the tourist seasons. Some visiting government officials and businessmen showed interest in their embroidery and began to purchase their products wholesale over the following years. Wu explained that their business was one of few available choices at the time, and business orders came in mostly because they excelled at commerce, rather than because of the quality of their products. Over time, they built their customer base and earned loyalty from long-term clients, which helped them dominate tourist markets.

According to the details I gathered through interviews, among the most successful were Liuyu and Feng, the couple who owned four factories (one in the village, and the other three in Kaili). Their products occupied 30% of the Butterfly Village ‘market’ in 2012 and 2013. In addition, there were three relatively large-scale enterprises in Butterfly Village, with one factory in Kaili and one or two in the village. Their products had around 40–50% market share in the village. The rest of the market share was distributed among other 12 or 13 Miao-owned factory businesses. The wealth inequality among Miao enterprises was discernible from the different styles of housing favoured by the owners. For example, Liuyu and Feng lived in a neat and bright three-storey cement building with tiled outside walls. Other large business owners also lived in houses which exuded urbanity: white tiles, green windows and wooden roofs. In contrast, smaller business owners lived in ordinary wooden houses in the traditional Miao style.

The new economic inequalities were on public display.

The villagers tended to make sense of their new experience with capitalist competition not in terms of structural factors, but as individual business astuteness. For example, Feng proclaimed that entrepreneurs "should have a feeling about which kind of products will be popular." Stories of business successes and failures abounded in the village, reinforcing the sense of competition and risks. The couple Long and Cheng had one such story to tell. In the years preceding 2008, the Beijing Olympics mascot *Fuwa* became very popular and some Miao businessmen invested in producing an excess amount of embroideries featuring *Fuwa*, expecting easy sales. However, this turned out to be a major failure, as neither tourists nor villagers liked those patterns. A few small enterprises went bust and had to resell their factories at low prices to other owners, including Long and Cheng. Heberer's study of Nuosu ethnic entrepreneurs in Liangshan, Sichuan Province, echoed the situation in Butterfly Village in that individual Nuosu entrepreneurs also considered commercial success to be a reflection of the business savvy of individuals, even though ethnic entrepreneurs are embedded in traditional social networks with relatives and clan supports (Heberer, 2007, pp. 115–116). Although both handmade and machine-made embroidery businesses "exacerbate existing cleavages within the community" (Greenwood, 1989, p. 171), people in Butterfly Village associated the former more closely with benefitting from inherited social ties and the luck of being born in wealthy households, whereas the latter's success was explained in terms of individual intelligence and effort. The introduction of the capitalist economy and the commodification of Miao embroidery also fostered the development of a culture of individualism in Butterfly Village.

Miao Men's Entry into Embroidery Business

Significantly, machine-made embroidery has allowed the entry of Miao men into the ethnic embroidery business. Once the production of Miao embroidery was decoupled from traditional craft skills, which had been guarded by Miao women, men could be brought into the process. At the time of my fieldwork, half of the 16-17 machine-made embroidery production in Butterfly Village were managed by Miao men, and these men exhibited greater ambition to expand their businesses than female managers. One of them confidently said: "Women are good at embroidery. Men are good at doing business. Since I took over this factory from my wife, the business has grown. She finds traditional patterns, and I deal with other things including recruiting workers, buying materials and filling out government paperwork." When I asked one of the men just why they thought men were better at business, his response was vague: "It's a modern activity."

As Liuyu and Feng's case demonstrates, the participation of husbands is crucial for the success of family-owned factories, especially if couples seek to expand their business. Wen was not so lucky. She worked as a furniture maker for four years in a factory in Hangzhou, Zhejiang Province. When she returned to Butterfly Village in 2003, her initial wish to start a hand-embroidery business did not materialise because the market was already crowded, and she neither had sufficient economic capital to buy high-quality vintage embroideries, nor social networks to win contracts from Han merchants. Following the advice of her cousin in Kaili, she decided to take advantage of the government subsidies to add to her savings of 25,000 *yuan* (AU$5,000) and set up a small factory there. Her husband disapproved of her decision, advocating for wage

labour in cities over self-employment because of the risk of financial loss. While Wen insisted on trying her luck and managed moderate success, her factory could have been much more lucrative. Had her husband supported her venture and worked with her in the factory, they could have doubled their managerial hours and brought in new business.

Miao embroidery production experienced a shift from a women-only activity to an inclusion of men in factory produced embroidery businesses. This shift, on the one hand, reinforced the cooperation between Miao women and men as they sought to develop machine embroidery businesses as their main sources of household income. On the other hand, it also reinforced the gender hierarchy in Butterfly Village by allowing men to become or retain the status of the breadwinner as well as enter the previously female-dominated domain of economic activities in the village. The changing gender relations among the Miao echoes similar structural and cultural tensions between traditional patriarchy and women's participation in income-generating activities in numerous locations (Chant, 2000; Pineda, 2000; Bradshaw, 1995; Feldman, 1992). In particular, a common theme among these situations is that increases in women's economic power within households frequently threatens men's sense of status and authority, prompting male partners to exercise "more powerful means of suppression than in the past" (Nash, 1993a, p. 148). In Chapter 7, I will investigate the shifting power balance in Miao households and the village community at large.

Village Leaders' Limited Impact on the Management of the Embroidery Industry

Since the 2000s, the value tensions and conflicts of interest intensified the complexity of village governance has intensified due to tension among key actors whose interests clashed. The harmonious relationship between the villagers and the village leaders has eroded with the expansion of the local tourism industry and the over-commodification of Miao embroidery. As discussed in chapter 5, the village leaders played a positive role in the early stage of local tourism development. Both individuals and the community benefited through collaboratively building Butterfly Village as a desirable tourism destination. However, the villagers have begun developing divergent goals and objectives as the village attracted more investments, government projects and tourists' attention. The lack of a common goal and different values provided new challenges to the village leaders. This is evident in their inconsistent approach to balancing the development and preservation of Miao embroidery, as demonstrated in the following story.

In 2002, a company from Zhejiang province sought to purchase 3000 pieces of small-sized handmade Miao embroidery in Butterfly village. Unlike other collectors and entrepreneurs who have high standards of the quality of handmade embroidery, this company was willing to buy worn and inferior items at high prices. In the beginning, the village leaders actively motivated women to sell their 'useless' pieces to the company, believing that it would bring additional revenues to residents. However, some women criticised the leaders as being short-sighted, as selling these pieces would lead to the loss of valuable samples of traditional patterns and designs. The village leaders responded by reversing their earlier decision and discontinued their engagement with this business to protect Miao embroidery culture. This aroused discontent in other women who thought the leaders acted too conservatively and ignored their business

interests. Eventually, the leaders settled with a hands-off management style: women should make their own decision and take personal responsibility for the outcome.

As more stakeholders participated in the commercial development of Miao embroidery, more conflicts of interest emerged among residents, tourists, cultural entrepreneurs and government authorities. The village leaders were faced with the delicate task of equitably distributing revenues and reducing tension in the community. Rumours were rife about the leaders were more interested in ensuring their personal and family interests than managing village affairs. As a result, the mistrust between Miao women and the leaders grew, and many Miao women refused to follow the leaders' suggestions, which further contributed to the tension between the leader and the villagers.

As shown above, the village leaders played a limited role when the Miao embroidery industry became more complex in 2000s. Although the village leaders attempted to maintain orders and stability, it seemed that they could not develop effective strategies to manage the industry based on "the perspectives they acquired through past experience, training, and success" (Snowden & Boone, 2007, p. 2). They successfully encouraged many villagers to sell vintage Miao embroideries in 1980s, and continued with this approach into the 2000s. However, the preoccupation had grown in Butterfly village's Miao embroidery industry that selling vintage Miao embroideries was increasingly difficult because of the rise of machine-made embroidery, the loss of vintage embroideries to the overseas market, and Miao women's increasing self-awareness of protecting the vintage items they owned.

Collectors and Their Continuing Influence

Domestic and foreign folk art collectors have continued to impact Miao embroidery production since the 2000s. Firstly, they played a major role in promoting specific embroidery styles as the embroidery that represented Miao culture, via mass media, to tourists with little knowledge of ethnic communities.

When making programs on Miao embroidery, national and local TV stations and magazines tended to seek a mutually beneficial cooperation with domestic art collectors: the display of rare and unique collections enhances the reputation of the collectors featured; the collectors provided not only samples of valuable vintage Miao embroideries for the shows, but also offered their professional interpretations of the items, the needlework techniques, and the motifs of animals and plants featured. This is despite the fact that many of these collectors do not specialise in Miao art and craft. Underlying their popularity with media content producers was the loss of high-quality vintage embroiders in mainland China in 2000s discussed earlier in this chapter, which made access to these items increasingly difficult. One consequence is that these collectors have come to assume a powerful influence on the kind of embroidery skills, aesthetic exquisiteness, as well as cultural and historical integrity that are widely believed to be authentic/authenticated. That is, their particular tastes and interpretations favoured certain Miao embroidery patterns over others, which strongly affected tourists' interests and purchasing patterns.

The collector-led and media-enabled promotions of certain types of Miao embroidery were certainly having an impact on the tourists I interviewed during my fieldwork. Most

of the foreign and domestic tourists visiting Miao regions I spoke to preferred cheap small objects in a particular style that could act as mementos of their visit to these regions. A middle-aged American female tourist articulated: “I knew it (an embroidered coaster) was manufactured in a factory and crudely made. I purchased it as a reminder of this journey rather than for investment in a precious item, so the quality is good enough for me. But I still hope the pattern and colour of it were drawn from Miao culture. Whenever I use this coaster, it will remind me that I have been in touch with Miao culture.” In a similar manner, a 43-year-old Han Chinese man expressed his expectation of ethnic souvenirs as follows: “I have travelled many ethnic minority regions and bought many souvenirs. I don’t mind either Miao embroidery products are locally made or standardised, mass-produced products. I just hope their aesthetics are similar to the traditional Miao style.” By their own accounts, the tourists interviewed most often gravitated towards patterns they had seen on TV, in museums and magazines, and imagined that these patterns were ‘authorised’ by experts as representing Miao culture. According to souvenir shop workers in Kaili, it was not uncommon for tourists to bring magazine or book cover photos featuring Miao embroidery and ask for the cheaper, machine-made versions of the similar design.

Secondly, collectors have overtime presented specific Miao embroidery styles as the most valuable targets of investment. Unlike tourists who purchase cheap machine-made embroidery as a reminder of the exotic culture tourism they enjoyed, art dealers and entrepreneurs who buy expensive handmade Miao embroidery have the expectation that these ethnic crafts “either bought cheaply or at great expense, are increasing in monetary value” (Marion, 1992: p. 165). Many followed collectors’ recommendations without being concerned about the artistic, historical and technical characteristics of the

items they acquire. Therefore, collectors' aesthetic tastes have become a main determinant of the commercial value of contemporary handmade Miao embroidery. As a result, prices of handmade Butterfly Miao embroideries have been higher than those from other Miao regions, driving by favour of well-known local collectors. For example, Xianyang Zeng and his daughter Li Zeng, both well-known local collectors, published a book titled Ethnic Miao Embroidery: the Zengs' Collection and Appreciation in 2009. They chose a 'typical' butterfly Miao embroidery pattern for the book cover, and highlighted the collective value of butterfly Miao embroidery throughout. The book explains that the price of the butterfly Miao embroidery piece has risen nearly 1000 times in the last three decades, and suggested "[I]t is very profitable to buy (Butterfly) Miao embroidery works at the current price level" (p. 30). The following few years saw a growing number of cultural dealers visit Butterfly village to search for the said handmade embroideries.

The continued influence of collectors on the commercial value of Miao embroidery since the 2000s attests that the popularity of a particular type of Miao embroidery in both the tourism and art markets does not necessarily relate to its cultural and artistic qualities, but is shaped by the "knowledge, power and wealth" of the collectors (Phillips and Steiner, 1999: 3).

From Producers to Consumers: The Changing Attitude of Miao Women Towards Machine-Embroidered Dresses

Machine embroidery was not only encouraged by the tourist demand for cheap Miao ethnic crafts, but also from within, by younger Miao women who migrated to cities for

paid employment. Migrating to cities directly affected the progress of making hand-made embroidery among Miao women, as their daily routine changed. Meifeng, a woman in her mid-fifties, worked at a toy factory in Shenzhen between 2001 to 2004. She originally planned to embroider after work every day, but the heavy workload exhausted her and left her with no energy for embroidery at night. In addition to the whole set of embroidered clothes she owned before her migration, Meifeng also wanted a new set to attend the New Year ceremony back home. Finding herself unable to produce the new embroidery she wanted, she resorted to buying a set of machine-embroidered dresses with the most fashionable patterns. She is far from an exception; many Miao women who work in cities do not have enough time to continue embroidering and choose to purchase machine-embroidered dresses for when they return to the village. As explained in Chapter 4, making embroidery not only satisfies material needs, but also symbolically represents women's industriousness, dexterity and intelligence. Women's embroidery practice was the measure of being 'a good Miao woman' in the eyes of their ethnic community. As shown in Chapter 5, the commodification of Miao embroidery has, to an extent, reduced stigma associated with cash earning among women, especially if they could demonstrate their economic necessity and piety rather than personal greed. As young women moved to cities in droves, they could position themselves as responsible daughters by earning much-needed cash for their families back in the village (Gaetano & Jacka, 2004). This has discouraged open moral judgment against Miao women who wear machine-made clothes during their return visits home.

Miao women's greater acceptance of machine-made embroidery was borne out of necessity to balance their new responsibilities as wage earners with their traditional

responsibilities as a Miao woman. However, the increasing number of Miao women who rely on purchased, machine-made embroideries and a greater acceptance of such a practice in their village also created an interesting phenomenon: the joy of consuming machine-made embroidery as fast fashion among young Miao women, rather than an embodied cultural practice as their mothers' and grandmothers' generations saw it. One of the impacts of industrialisation on village life has been the adequate supply of mass-produced goods (Parikh & Thorbecke, 1996). Many manufactured goods, such as televisions, telephones and refrigerators, have gradually penetrated the majority of Butterfly Village households. Moreover, young Miao women have gradually become accustomed to faster cycles of consumption of fashion items, including clothing and cosmetics. In this context of fast-changing trends, the young women have come to view machine-made embroidery in terms of a seasonal fashion cycle. Fengmei, in her mid-twenties, bought a few sets of machine-embroidered clothes per year. She gave a nonchalant shrug as she explained her recent return trip back to Butterfly Village: "Every woman noticed that I wore machine-embroidered clothes at festivals or other big occasions. So what? I just want to look beautiful. I can change T-shirts and hoodies when I am getting tired of old ones. So, I can do the same thing with embroidered clothes." Based on his research in Purhépecha in Mexico, Nelson similarly found that, as it became common for Indigenous women to market and sell their indigenous cultural activities as tourist commodities, local people came to consume this commercial version of their culture (2006). For young women like Fengmie, the value they attach to Miao embroidery has changed under modern capitalism. In the next chapter, I will delve into the changing concept of authentic embroidery among the Miao in Butterfly Village.

This chapter has examined the evolving commodification of Miao embroidery since the 2000s. An informal embroidery economy has grown exponentially, alongside the deepening commodification of Miao embroideries as tourism commodities. In contrast to previous decades, when Miao women mostly collected, distributed and sold vintage embroideries they had at home, the last two decades have seen the emergence of new distribution and production methods. One the one hand, the putting-out system ensures that there is a steady flow of handmade embroideries into the commodity market, without destroying or losing precious personal possessions. On the other hand, the factory-produced embroideries meet the tourist demand for affordable Miao souvenirs. In both systems, pre-existing inequalities among Miao households have taken on new forms under modern capitalism, creating and distributing opportunities in an uneven manner. If the expansion of capitalist production reinforced but did not significantly alter existing power inequalities within Butterfly Village, it has shifted Miao people's cultural understanding of their craft. This is the topic I turn to next.

Part 3

Chapter 7 The Reconfiguration of Gender Relations and Gender Roles

As discussed in the Chapter 4, Miao embroidery has played a central role in the social construction of Miao women's gender roles in Butterfly Village. The cultivation and performance of femininity, the social evaluation of women and the shaping of gender identities are all reflected in Miao women's embodied embroidery practices. With the commodification of Miao embroidery, Butterfly Village is undergoing social, cultural and economic changes. Most importantly, Miao women and the embroidery they produce are not simply carriers of Miao culture, signifying "the uninterrupted existence of a well-preserved traditional culture" in the Chinese modernisation process (Schein, 2000, p. 129). Miao women are active participants, drawing on Miao embroidery techniques and resources to improve their own economic and social status. Similarly, the spatiality of Miao women's daily lives, their economic autonomy and the division of household labour have reconfigured through their engagement in Miao cultural production and consumption. In other words, the promotion of ethnic craft souvenirs has created an opportunity for Miao women to assert their agency in the reconstruction of dominant gender norms in Butterfly Village.

This chapter focuses on the multifaceted and dynamic reconfiguration of gender roles experienced through the commodification of Miao embroidery in Butterfly Village. I begin with the change of Miao women's space, which was brought about when they began selling Miao embroidery outside of the Miao mountain villages, and the related changes to the existing division of household labour. Next, I explore Miao women's

empowerment and responsibility, and the shift in their roles from housekeepers to the economic agents and the income earners. Finally, I focus on the shifting gendered aspects of paid labour among workers in Butterfly Village at large as a result of Miao women's commercial embroidery activities and changing social expectations. This chapter argues that women's enactment of individual agency is intrinsically linked to the community's effort to challenge the objectification of the Miao as an ethnic group and their marginalisation in the market economy. Key to understanding the changing gender roles in the household as well as at the village level is the drive to realise economic and social autonomy among individual Miao women, and the cultural autonomy of the Miao as an ethnic group.

The Expanding of Miao Women's Space: From "Producing Embroidery at Home" to "Selling Embroidery in Cities"

Panyu was standing in front of a wall of pictures and proudly told me: "I have been to many places. Look, this is me in front of the Tiananmen Square in Beijing. This one was taken in a park in America. The next one is my favourite. I wore an outfit of Miao embroidery and introduced our embroidery to a tourist at an exhibition in Hong Kong." I turned to pictures she was pointing at, feeling astonished that she visited several foreign countries and more than twenty provinces of China in the last ten years. She noticed my surprise, and explained with some embarrassment: "I never thought that I could go to these places. Before I started my Miao embroidery business, the farthest

place I went to was Kaili."[35] Kaili was the closest big town to Butterfly Village and for most Miao women it represented the outside world. Miao women delighted in the atmosphere of modern life when they wandered through high-rise buildings, took a bus, and bought colourful candy. This conversation took place in Panyu's home in Butterfly Village. She began to sell Miao embroidery in the early 1990s, and expanded the scale of operations in the following years. The photos were taken when she participated in exhibitions, met customers and placed orders in various places. With increasing numbers of Miao women engaging in embroidery businesses, many have gone to different cities to sell their embroidery. This is in stark contrast with the previous situation Miao women faced, when few of them left their mountain villages let alone travelled to other provinces and foreign countries. As mentioned above, before they participated in the Miao embroidery industry, the farthest place most Miao women went to was Kaili. As it was a big trip for Miao women and their families, there was a small, though necessary ceremony that took place before they left home. Normally, the eldest man of a family would kill a bird, which signifies that the woman would not 'fly away'. However, these ceremonies took place only occasionally.

This section will explore the change of Miao women's space and how it affects traditional gender norms in Butterfly Village. Research examining the interrelation between gender, place and culture reveals that space is not simply a geographical concept, but a spatial order which is established, arranged and maintained by gender

[35] Kaili is the administrative capital of Qiandongnan Miao and Dong Autonomous Prefecture, in which Butterfly Village is located. Kaili is a county-level city and the political, economic and cultural centre of the Prefecture. With improvements to the highways and public transportation, it has taken 30–40 minutes (around 40 kilometres) by bus from Butterfly Village to Kaili since the 2000s.

power relations and gender norms (Bryant & Pini, 2011; McDowell, 2007; Dyck, 2005). Therefore, from producing Miao embroidery at home to selling Miao embroidery beyond the village is a change that has occurred because of Miao women's commercial practice. Moreover, this change also relates to the reestablishment of a gendered spatial order that affects the division of labour in Butterfly Miao society. In other words, the sale of Miao embroidery in cities does not only affect Miao women, but also affects Miao men's attitudes and activities. Conflict, negotiation and cooperation between Miao women and Miao men has occurred in the selling process, during which gendered power relations have been rebuilt.

Traditionally, Miao women's daily life activities occurred in two spaces: home and farmland. The farmland was a space where both Miao women and men worked in close cooperation with each other. There was a gendered division of labour in agricultural activities; men engaged in planting and harvesting, while women contributed by fertilising, weeding and irrigating (Wang, 1995). By contrast, Miao women took over all household chores at home, including cleaning, cooking and looking after children. Home was an exclusively female space where Miao women performed their traditional gender roles.

There were also gender-based entertainment spaces. Most Miao women understood making embroidery as both an obligation and a form of entertainment and spent their leisure time on producing Miao embroidered clothes for themselves and their daughters, usually inside their house or at the doorway (see Photo 7.1.). Miao women also spent their leisure time entertaining female friends and relatives at home (usually on the

weekends), dancing and singing together. Meanwhile, Miao men entertained themselves with "bird fighting", both a pastime and a form of gambling, in small designated squares (see Photo 7.2.).[36] Some men enjoyed playing the lusheng, a bamboo reed pipe instrument that was learnt and played only by men in Butterfly Village.[37] Interestingly, both men and women consciously constructed and maintained men-only and women-only spaces while participating in their daily entertainments. For example, men deliberately left home when Miao women had dinner together, and Miao women refrained from approaching the squares while the Bird Fighting took. This was the reason I felt hostility from Miao men when I took the picture of the bird fighting scene, as I was an intruder who broke the gender segregation.

In respect of embroidery, Miao men frequently dropped in on the women as they embroidered at the doorway of a house. Even though the doorway is a public space, Miao women felt uncomfortable when men dropped by but had no problem with other women coming to visit. Miao men also expressed similar views that they normally walked rapidly through the doorway if a woman was embroidering there, as women's embroidery implies the place temporarily becomes a woman's space.

---

[36] Bird fighting is a traditional and popular pastime in Miao regions in Southwestern China. It is a blood sport between two male birds. Trapped in a birdcage, the birds become aggressive either with or without the owner's encouragement and peck each other. Most Miao men put a lot of money, energy and time to pick up, breed and train their fighting bird, because whoever owns a strong bird is admired by other men.

[37] Lusheng is important in Miao cultural. It is commonly used in religious rites, ceremonies and festivals to create a sacred, solemn and joyful atmosphere. Men playing the lusheng while women dancing to the music is a time-honoured custom in Miao villages. For discussions on the cultural and historical significance of the lusheng to the Miao ethnic group, see Falk 2010.

Photo 7.1. Miao women are embroidering together at the doorway.

Photo by the author.

Photo 7.2. Miao men are playing “bird fighting” in a small designated square.

Photo by the author.

In discussions regarding the relationship between gender and space in feminist anthropology, many of the studies take a view that gendered space reflects "gender asymmetries" (Löw, 2003; Mcdowell, 2007; Rosaldo, 1974). The asymmetries stem from gender roles based on the division of the public and private spheres. Michelle Rosaldo explains that the domestic sphere is associated with "minimal institutions and modes of activity that are organized immediately around one or more mothers and their children", while the "extra-domestic" refers to "activities, institutions, and forms of association that link, rank, organize, or subsume particular mother-child groups" (1974, p. 23). This relating private/public dichotomy is naturalised based on the idea of biological differences between men and women, in particular, women's differences from men due to their female reproductive capacity. Importantly, the private sphere is considered inferior to the public sphere, and it signifies the submission of women in the social structure of Western cultures (Gorman, 2013). Therefore, the two gendered spheres reflect gender inequality and men's power and authority over women.

Because the sociological conceptualisation of the separate gendered spheres has taken place within the context of Western industrialisation (see, for example, Parsons, 1955), feminist critiques have tended to respond by theorising the devaluation of the female domestic sphere within this specific context (see, for example, Hochschilds, 2012). The societal veneration of the male breadwinner model is at the heart of such theorisation, and heavily focuses on the middle-class experience. Hence, existing feminist inquiries commonly centre on women's unpaid and underappreciated care labour, and/or the balancing of family responsibilities and paid employment (Mahere, Lindsay & Franzway, 2008). However, anthropologists have questioned the universality of the association of the public sphere with masculinity and the private with femininity, based

on their investigations of gender divisions of labour in different cultures and societies. For example, Leacock et al. (1978) pointed out that the Iroquois view the domestic space as also the public, political and economic arena, in which both men and women are active. Sudarkasa made a similar observation that "public" activities, such as political and economic ones, were embodied in the domestic space in West Africa in the pre-colonial period. The traditional overlap between the public and private spheres, especially in economic and political arenas, has been eroded with the spread of the "market economy" and the development of the nation-state (1986). In other words, as Rayna Reiter pointed out, the gendered spatial division of labour takes different forms in a diverse range of societies (2011). Such anthropological evidence highlights the implicit privileging of certain households in conceptualising the gendered spheres, namely, the middle class in industrialised Western societies.

It is important to point out that the private/public dichotomy and its unequal distribution of power prevalent in industrialised Western societies does not automatically apply to other societies in the same manner. In the case of Butterfly Village, it has been a largely agrarian society in which both men and women work in the field in order to make economic contributions to the family. In addition, women tend to undertake most of house chores and family care labour.

In terms of family configuration, Butterfly Village are patrilineal and patrilocal. Kin clans based on patrilineal descent form the basis of the organisation of the village. There are five patrilineal clans in the village. Each clan shares a common male ancestor, corporate agricultural land and ancestral rites. Since the Qing dynasty, these clans have

been symbolically distinguished by their Han Chinese surnames: Long, Pan, Zhang, Wu and Li.[38] Relationships and cooperation between households are based on the men's kinship networks. Households affiliated to the same clan mutually benefit each other in farming, house-raising, weddings and funerals. As a rule, an adult man is socially expected to marry a woman from a nearby Miao village of the same clan.[39] After marriage, the woman leaves Butterfly Village and enters the family and clan of her husband. The rule is the same with young women, who are expected to marry Miao men in nearby villages. As the married women are not native to the village, and unmarried women will leave the village when they marry, men have traditionally taken an active role in social activities, such as religious ceremonies, weddings and funerals. Men are considered the head of the family because they receive the support of the clan. As Gary Lee and Nicholas Tapp (2010, p. 161) point out, "men's social roles are often seen as more important than those of women."

The nuclear family and the extended family are the main social groups in Butterfly Village. A typical nuclear household consists of parents and unmarried children. An extended family consists of parents with the youngest married son, his wife and their children. Differing from primogeniture practiced by the Han, it is the youngest son's responsibility to support the parents (Shi, 2003). As a rule, when children get married in Butterfly Village, daughters move to the husbands' village, elder sons set up their own households in Butterfly Village, while the youngest son and his wife remain in his

[38] Using Han Chinese surnames reflects the cultural assimilation by the dominant Han ethnic group to Miao. See Oakes, 1995, Schein, 1997, Tapp 1989; 2000; Lee and Tapp, 2010.

[39] The intermarriage between Miao and other ethnic groups is rare. Butterfly Villagers told me that there were only six Han women that had married into their village in the last few decades.

parents' home and care for them. The parents will bestow a large patrimony to the youngest son in return for his support.

Butterfly village was a self-sufficient agrarian community before industrialisation. Both men and women were providers for the family. As Diane Elson points out, "work is gendered" (1995, p.1). There is a clear division between "men's work" and "women's work" based on the patriarchal clan system and family configuration. First, in terms of farm work, men would undertake the most strenuous activities, such as ploughing, harrowing, ditching and pasturing cattle, while women would undertake cutting firewood, transplanting, reaping wheat and feeding poultry. Both men and women would participate in tasks such as sowing, fertilising and irrigating. Second, women do most household chores, including weaving, sewing, laundering, cooking, and caring for children and aged parents. Men were responsible for building and repairing the house, as well as cutting firewood (as a shared responsibility). In general, women were responsible for a heavy workload in agricultural activities and managing most household chores. Men spent a lot of time smoking and chatting around charcoal burners or at the doorway after they finishing farming.

The division of labour in Butterfly Village has been affected by a China-wide trend of rural migrant workers moving to the cities on the eastern seaboard since the late 1990s, as discussed in Chapter 2. Shuou, my embroidery master, told me: "In those years, everyone moved to the cities except sick and aged people. We were eager to make money and curious about the outside world. The whole village was nearly empty. Most agricultural land was barren because no one did farm work. We wanted to see the

outside world to experience new things." For Butterfly Villagers, the increased earning potential and the attractions of a modern urban life were two of the main motivations for their migration to cities. As Ye et al. (2016) point out, China's rural-to-urban migrations may be understood as something akin to time travel: a movement from the neglected margins of modernity to the rich, civilised, futuristic centre. The shift from agriculture to wage labour has greatly affected the division of labour in the village. Most adult men and women stayed in well-developed cities as temporary workers, lest they miss any chance to earn an income. They normally returned home during big festivals and ceremonies, and stayed only one or two weeks at home.

Under these circumstances, most children remained in the village and were taken care of by relatives. They were considered the "left-behind children", as they "grow up separated from their birth parents, living through a childhood without decent parenting" (Mu & Hu, p. ix). The phenomenon of "left-behind children" is a result of rural-to-urban migration, and now is becoming a serious social problem in China. In Butterfly Village, looking after children has become the responsibility of the grandparents, especially the grandmother. Some parents in a nuclear family entrust their children to the wife's parents, while others take their children with them when they work in the cities. A few children are place at a local boarding school.

The source of family income has also changed during this transformation, from agrarian self-sufficiency to wages for migrant workers. Adult Miao men and women send most of their wages to their elder parents to fulfil their duty of supporting their parents, and as compensation for taking care of the grandchildren. With this money, some aged

villagers are relieved from heavy farm work as they are able to buy food and other necessities from others. Some middle-aged parents still do farm work, saving money for unexpected needs. For most Miao families, quality of life has increased as they have been able to contribute to the family by both agricultural and non-agricultural income-generating activities. As Wolf (2001) points out, when peasants are involved in the market economy, they try a mix of strategies to make money.

The Miao traditionally do not accord unequal value to 'men's work' and 'women's work', both due to women's participation in agrarian labour in the public sphere, and the cultural value placed on women's embroidery activities in the private sphere. However, it is equally important to point out that the home as the private sphere is still feminised in Miao culture, where embroidery activities are concerned.

For example, Chien Mei-ling explored the intimacy between Miao married women and their weaving practice based on her ethnography in Miao villages in eastern Guizhou. She pointed out that home is viewed as the women's private sphere when they are weaving, an intimate and private activity. Aside from help from mothers and sisters, only sisters-in-law who lived together would help each other to spin and do other related weaving activities. Others, especially men, are not allowed to enter to the house when women are weaving (2016). In line with what Sun and Liao state about Miao women in Xijia (2016), an eastern Guizhou village, Miao people consider the home a woman's place.

Due to the time-consuming nature of mastering and producing embroidery, Miao

women spend much of their time in and around the home when they are not out in the field. The cultural obligation for Miao women to produce embroidery adds to their other obligations as workers, such as farm work, house chores and the domestic care of children and the elderly. Miao embroidery is a symbol of family wealth, and the cultural expectation for its production is also an economic expectation for women. As an indoor activity as well as a cultural and economic imperative for all women, embroidery has the function of controlling Miao women spatially and temporally because "the demand for women to practice domestic arts prevented them from doing anything else" (Parker, 2010, p. 75), compromising opportunities to engage with a variety of activities. This presents a clear parallel with research findings from industrialised societies, which show that women suffer from a "double burden" as breadwinners and family carers (Schor, 1993). In the Western context, gendered unequal power relations persevered during the shift from pre-modern to industrial modernity whereby women's labour continued to be controlled by men and their economic agency was limited, for example, through the concept of the family wage and women's expectation to provide unpaid reproductive labour (Hartmann, 1979a). Yanagisako (1987, p. 111) usefully posits that the private/public dichotomy includes two types of metaphors: the spatial metaphor signifies the division between the inside and the outside, and the functional metaphor refers to power and status associated with different social roles based on the gendered division of labour.

The commodification of embroidery has shifted the gendered and spatial configuration of labour in the Miao community. Since the late 1980s, women in Butterfly Village have increasingly engaged not only in production but also marketing and selling embroidered 'products' in urban areas as entrepreneurs. As facilitators between Han

and foreign businessmen and ordinary Miao women, they have also begun collecting embroidered products (see Chapter 5 and Chapter 6). Their major motivation for entrepreneurship is to earn money to sustain the family, especially when farming brings insufficient income. A similar phenomenon was observed in Indian villages where women produced and sold traditional bamboo crafts outside the villages for family subsistence (Krishnaraj, 1992).

In the early stages of the commodification of Miao embroidery (1970s–1980s), some women who sold their work outside of the village did so as a result of pressure from others in the community. Longying, aged 61, went to Guiyang to sell Miao embroidery in 1987. She was criticised by villagers upon her return. Longying recollected as follows:

> Many people did not believe that I could earn money. They said I would be cheated by a Han businessman and lose all my embroideries. My mother-in-law warned me never to try it again, and told me that Miao women should not leave their home.

Another Miao woman, Fenghua, aged 67, confirmed that the mistrust in women's capabilities outside the home was pervasive in the 1980s:

> The whole family strongly opposed my idea of going to Yunan province to sell my embroideries. My husband said he feared losing me as I could not survive in a strange place, and the home was the safest place for women. My mother-in-law

> said I would bring disgrace to the family if I left home alone, which Miao women should not do.

The traditional role of Miao women was associated with housework, embroidery and other activities undertaken inside the home. Their value stemmed from their engagement in domestic duties, and their ineptness in the 'outside' world was both taken for granted and reinforced through everyday forms of social control and moral narratives about gender, as well as ethnicity. This shaped the self-identity of many Miao women, which is reflected in how they recount their first experiences selling embroidery outside the village. Fenghua's words were echoed in other interview narratives:

> I didn't want to leave home at all. But my family was so poor and I had to try anything to make it better. I knew a good Miao woman should not do that, but I had no choice. I felt ashamed of myself.

These Miao women ventured to cities to market embroidery, not for the purpose of challenging traditional gender norms but in order to earn money to help the family climb out of crushing poverty.

It is notable that family economic strategies played a role in the way women became sellers of embroidery. Comments from Xiufa, aged 63, demonstrate how the spatial expansion of Miao women's economic activities was intertwined with a shift in gender

roles in the home. She remembered how she ended up in Shanghai to sell Miao embroidery in 1987:

> Mr. Fang, a teacher at an academy of fine arts in Shanghai, bought my embroidered clothes when he visited our village in the previous year. Because he was too busy to stay in our village and carefully select embroideries to bring home, he asked me to collect elegant embroideries on his behalf and visit him in Shanghai to sell them to him. The next year, the long cruel winter caused a bad harvest, and all family members suffered from hunger, and there was no money to buy medicine for my sick son. My husband's health was not good at the time, and my parents-in-law were old, which meant nobody could afford to do heavy farm work. The following year I rang Mr. Fang from the village head's office, and he offered free lodging and return fare for me. I could feel his sincerity and enthusiasm, but I still hesitated since I had never been far away from home. My husband encouraged me to go so that my income would reduce the family's economic burden, and comforted me by promising he would look after the family during my absence. After two months, I was on the train to Shanghai, carrying eight elegantly embroidered garments I collected from Miao women in nearby villages. Things went well. Mr. Fang and his friends readily bought all the garments on the day I arrived Shanghai. As a middleman, I earnt nearly 1000 *yuan*, a big fortune at that time. I declined a two-day tour of the city Mr. Fang proposed to arrange for me, as I missed my son and worried about the family. I left Shanghai the next day morning.

Xiufa's account demonstrates how her family's economic circumstances led to her

plunging into the business of selling embroidery in a big city away from her home. Her husband played a key role in convincing Xiufa, as well as making her entrepreneurial activity possible by undertaking the role of the homemaker in her absence. As in the cases of other families, Xiufa and her family's foray into embroidery businesses was initially motivated by economic necessity and was made possible with an increase in encounters with urban consumers of Miao embroidery as they arrived more frequently to Miao villages. The intentions of Xiufa and her husband were not to challenge the dominant norms of gender roles by expanding Miao women's activity sphere beyond the home and the village into new economic activities in the city. Instead, they were motivated by economic necessity and facilitated by a chance encounter with an urban consumer.

Different trends were observed in the 1990s. As Miao women's engagement in embroidery marketing and sales increased their entrepreneurial activities evolved and diversified. For example, some Miao women began to work with extended family members and acquaintances. They created a full-time job for themselves by renting stalls at craft markets on a long-term lease of one or two years. Other women were hired by textile factories in faraway cities to produce Miao embroideries, or by museums and tourism companies to perform their embroidery skills in public. The increased participation in business activities and/or wage labour meant Miao women and their families came to experience prolonged absences from home. For example, Pang and her sisters sold Miao embroidery at Panjiayuan Market in Beijing between 1993 and 1995. She only managed to return home three times during those two years, spending time at home for less than one month each visit. Li, an employee of an ethnic tourism company in Guiyang, produced Miao embroidery at an ethnic craft store every day to

attract tourists. She could only go back to her village during the holidays. Husbands of these Miao women increasingly took over household chores and care labour, such as cooking, and caring for children and aging parents—all of which were previously considered a woman's role.

The commodification of Miao embroidery brought to Butterfly Village a more situational division of household labour which was not strictly gendered. The women undertook household chores when they were at home, while Miao men took over these tasks when women left home for paid work and business. For example, Pu ran a store in Kaili, selling handmade embroidery pieces she and nearby villagers produced. She looked after the family back in the village whenever her business allowed, and lived in a flat above the shop at busy times. During the peak tourist season, I witnessed Pu's husband feeding their three-year-old daughter every day. When asked whether her husband ever complained about his new role as a primary carer of their child, Pu replied:

> Sometimes. After all, feeding kids is considered a woman's job. But he had to accept it, because he is not able to do the embroidery business. I can identify embroiderers' skills, the patterns used in handmade products, their age, etc. But he can't.

The commodification of Miao embroidery began around the late 1970s, earlier than the large-scale migration to cities that took place during the 1990s. Miao men have not had the same opportunities to earn money in cities that women have had. By acknowledging their economic necessity, men had to step in to do women's work while their wives

were away, although they still believed in a traditional gendered division of labour and would revert to old behaviours once the women returned, felt annoyed at having to do chores, and were clumsy in cooking, washing and looking after children.

The new arrangement of care duties between wives and husbands loosened the rigid division of household labour. This is also evident in men's increased participation in reproductive labour even when their wives were at home. For example, Long's husband Ran took over family care duties when Long, aged 63, had to produce hand-embroidered purses and other small items day and night in order to meet delivery deadlines for orders placed by tourist companies. I was invited to their place for dinner during one of these busy periods. Ran was busy cooking while Long sat in the living room, embroidering. He explained his acceptance of the change in their routine: "Both of us are doing good things for our family. She embroiders as she is good at that, and I cook as it is easy for me to do."

The traditionally sanctioned monopoly that Miao women had of their embroidery helped shape the shift in the gendered division of labour at home. They mastered sophisticated skills and developed a keen eye for details through their lifelong embodied practice of embroidery. No quick method was open for men to become skilled embroiderers to compete with, let alone replace women in their new economic position as sellers and marketers of Miao embroidery. As families sought to increase income and wealth through their embroidery businesses, men had little choice but to maximise their wives' economic worth by taking over what was previously considered women's work at home.

To sum up, the commodification of Miao embroidery led to an expansion of Miao women's economic sphere form the village home into large cities, which in turn shifted the division of household labour that had been based on rigid gender roles. This change reflects rural Miao families' responses to the introduction of the capitalist economy and their participation—hesitant at first and increasingly active as time went by—in the marketisation of ethnic craft. Miao women's involvement in embroidery businesses indicates "the integration of rural 'Third World' communities into the world economy" (Chibnik, 2003, p. 122). Following the commodification of Miao embroidery, Miao women's traditional position in the home paradoxically made possible their participation in economic activities in the public sphere, where they monopolised their role as both "producers" and "marketers".

In the following section, I will examine how Miao women's embroidery enterprises empower them with their increased economic autonomy and the shifting power relations in the household.

The Economic Empowerment of Miao Women in the 2000s

Although Miao women's initial purpose of selling embroidery was to improve their families' poor economic situation, they increasingly realised and enjoyed the benefits brought by their economic independence, despite the heavy responsibility their newfound 'breadwinner' role brought to them. This section centres on the achievement of Miao women's self-empowerment on the one hand, and the new responsibilities at the household level such empowerment brought, on the other hand. The combination of new empowerment and responsibilities was the bedrock of the reconfiguration of

gender roles that took place in the Miao community since the commodification of embroidery began.

Empowerment has been variously discussed in anthropological studies with a focus on the gains and losses of power in various social systems, and the interaction between culture and power (Lucas, 2007; Cheater, 1999). Particular attention has been paid to the way women's social status and gender relate to social institutions. The improvement of women's economic capacity has been found an important factor in reconstructing gender roles in diverse patriarchal societies. For example, women's economic empowerment has been a way to improve their quality of life in Malaysia (Subramaniam et al., 2013), pursue the lives they want to live in India (Kishor & Kamla, 2004), and gain more decision-making power at the intra-household level and the community level in rural Bangladesh (Mahmud, Shah & Becker, 2012). In other words, economically empowered women can become more independent, autonomous and self-determined, which, in turn, allows them to challenge gender inequalities.

For Miao women with embroidery businesses, their increased economic autonomy was one of the most significant changes brought about by the commodification of the ethnic craft. The conversation between two old Miao women in a market illustrates their awareness of this change. One advised the other:

> I do not understand why you keep making and selling embroidery. You have good sons and daughters-in-law who take very good care of you financially. Your poor eyesight is not fit to making embroidery, not to mention your shoulder and back pains. Why torment yourself?

The response highlighted that her embroidery business was more than a livelihood: “I feel good when I have my own money. I can decide how to use it.” Holding up an electronic toy train, she proudly proclaimed: “I bought this for my grandson. His parents refused to buy him this expensive toy. But I have money and I am willing to spoil him.” Similarly, young Miao women in the village valued having the means to enjoy different consumption habits from their husbands and families. They shop online to purchase “modern” items, such as cosmetics and high-heeled shoes, despite frequent complaints from their mothers or husbands that they waste money on useless things. As Wen, a young woman, said: “It makes me upset when my family criticise me. But when I think about how I can afford these things thanks to the sales from my embroideries, I feel happy again.” For these young Miao women, embroidery activities are increasingly perceived as a source of disposable income and consequently their financial autonomy.

Miao women’s growing capacity to earn cash from their embroidery businesses has also increased their status in the household. Their financial contribution to the family income is appreciated, which is an immense source of pride for them. When Zhang sold her embroidered wedding dress, which she embroidered with the help of her mother, for 2000 *yuan* (400 AUD), her sadness about parting with her creation was mitigated by the comfort she felt upon receiving gratitude from her mother-in-law:

> My mother-in-law would take for granted things I do for my family, like cooking, cleaning and nursing the children. For her, these are just duties I’m expected to do. But she felt sorry for me when she learned that I sold my wedding dress, she felt sorry for me. She saw it as a great sacrifice for the sake of the family’s finances. It

was the first time she thanked me. I felt comforted and proud that she finally acknowledged my contribution.

Embroidery as an income-generating activity has not only shifted women from unpaid domestic carer to an economic agent, it has raised the women's status in the family and their emerging breadwinning capacity has also given them greater decision-making power inside the home. A discussion about a house renovation between Shuou, my embroidery master, and her husband are illustrative of this. In Butterfly Village, most Miao families view house renovation as a priority expenditure following food and clothing. Traditional Miao houses are timber-framed and therefore highly flammable and easily damaged by moisture. In the 1990s, relatively wealthy families began using cement rooftops and floors, brick walls, and glass windows to improve the housing conditions as well as to modernise the house design. House renovation has since become an important marker of class distinction, and thus a major motivation for aspiring Miao women to engage in embroidery enterprises, including Shuou. The issue of home renovation was a constant source of quarrels between Shuou and her husband Ming, which I regularly witnessed while visiting their home as her apprentice. Shuou preferred to save a large sum of money before extending their two-storey house, which was still new. Ming felt it was important to build a three-storey house as soon as possible. Eventually, Shuou challenged him bluntly: "Go ahead if you can find the money," before her husband silently walked away. He later told me that while he was upset with her attitude, he also understood the limits of his decision-making power. He conceded: "She is the boss on this one." The shift in power relations did not escape Shuou, who happily declared: "I have a voice in the family now."

Similar stories of shifting power relations were shared by many families in Butterfly Village, following the entry of women into embroidery businesses. Nash observed similar trends during his study of Mayan women's participation in the artisan market (1993a). By discussing the increased control young single women had over the timing of their marriage, and married women's greater input into decisions about household spending, he argued that women's economic empowerment helps them to acquire the "ability to make choice" (p. 149), which in turn disrupts the existing marginalisation of women as family members. This echoes a similar trend in industrialised societies where women's increased participation in paid employment has been seen as a challenge to the patriarchal gender order in the family.

The capacity for Miao women to negotiate household decisions is further enhanced by their business activities outside the private sphere, such as networking with government officials, thanks to their greater knowledge and experience beyond their village. For example, Li was nominated by the Guizhou Intangible Cultural Heritage Protection Centre to be a representative successor of Miao embroidery. This is an official title for those who are qualified to present Miao embroidery and teach embroidery skills to non-Miao people. It reflects an official acknowledgement of the skills required for traditional Miao embroidery.

This led to numerous invitations from government and non-government organisations in various provinces and even foreign countries to promote, display and perform Miao embroidery techniques. Back in Guizhou, Li ran a craft store in Kaili to sell hand-crafted and machine-made embroideries to tourists. In one Miao man's words, these

well-travelled and well-connected Miao women “have seen the world”, rubbing shoulders with influential outsiders, visiting faraway places to enjoy exotic scenes and sample exotic foods. Such experiences gave the women confidence and helped earn more respect from Miao men in Butterfly Village.

With greater autonomy, status and decision-making power in the household came greater responsibilities and expectations. Li’s experience continues to be illustrative. When Li’s son entered university, she pushed him to major in cultural industry management, despite his resistance. This was so that he could participate in her business after graduation. Li’s understanding was that cultural industry management would teach her son about how to promote Miao embroidery to tourists. She expected his son would design fancy packaging with some unique slogan for her embroidery. The whole family supported his mother’s decision, as they thought his mother “knows everything”. The young man lacked motivation and was not doing well in his studies, which worried Li: “The thing is, they (the other family members) think I am competent to do everything, and it’s such a huge pressure. They would blame me if my son could not graduate from the university. But how can I guarantee that!” As Basu and Koolwal point out in their study in India (2005), female empowerment gives both authority and responsibility to women. There is a parallel experience in West Bengal; while women could wield more authority and familial power, the new responsibility was also a burden on them (Ganguly-Scrase, 2003).

Because the authority and responsibility were so new to the Miao women, they had to improvise how they would manage their new roles. As a patrilineal village, men were

seen as the decision-makers in the family, which reflected not only their authority over women but also the authority of the male kin clan. The unfamiliar and emerging status of women shifted existing relations in the household, and new gendered family roles required all family members to make adjustments.

The gendered nature of Miao embroidery production marginalised men in the embroidery economy. When asked about their wives' embroidery businesses, the most common response from the men in the village was "I have nothing to do with it (*Wo Buzhidao Zenme Nong*)". There was a considerable discomfort among the men in Butterfly Village regarding the idea of participating in marketing activities for their wives' businesses. Sometimes, men simply said it felt "weird" (*Qiguai*) to be involved in women's craft. The men's (self) exclusion was also a business decision for some. A tall and good-looking man in his thirties did consider helping his wife sell her embroideries, but eventually he decided against it. His worry was that the buyers would not be willing to buy crafts from a man. He explained: "People naturally associate Miao embroidery with women. They might even think the items must be fake if a man was selling them." His worry stemmed from how Miao culture is typically represented in China through tourist brochures, TV programs and other visual images. In virtually all promotional materials on Miao culture, there is a smiling Miao woman in an elaborate embroidered dress and silver jewellery. The popular representation of women as the bearer of Miao ethnic culture occurs in a context in which the Han Chinese generally feminise ethnic minority cultures. There is a binary of the masculine and modern Han Chinese, and the feminine and traditional ethnic minorities (Harrell, 1995; Gladney, 1994). As I will discuss in Chapter 9, the Han ethnicity is considered unmarked and naturalised, whereas the very definition of being an ethnic minority means not being

Han Chinese. The feminisation of ethnic minority cultures and peoples has the effect of portraying the Han Chinese as masculine protector, both naturalising their control over the marginalised ethnic groups and reinforcing the latter's inferior status (Gladney, 1994; Diamond, 1995). As a result of this unequal and gendered ethnic relationship, Miao women are seen as the face of Miao culture, while Miao men (self) exclude themselves from the modern embroidery economy in order to maintain a booming business practice.

When their wives became active in their embroidery enterprises, the majority of the men in Butterfly Village found their reduced authority difficult to accept. In many ethnic minority communities, women's participation in the modern economy and their increased economic productivity tipped the power balance in the household and threatened male patriarchal authority. For example, Mayan men viewed women's economic independence through traditional craft businesses as a threat to them (Nash, 1993a). The economic empowerment of Emberá indigenous women from eastern Panama through the production and sale of local crafts was also met with men's suspicion and even fear. In the interest of protecting their patriarchal status, the Emberá men positioned the women as "housekeepers" rather than "economic agents" (Colin, 2013, p. 503). These ethnographic studies variously examined how men attempted to maintain their status and privilege by resisting changes in which women became breadwinners. In Butterfly Village, the men were at best ambivalent when they witnessed women's increased economic autonomy and power within the household.

Many Miao men receded into the background in terms of direct involvement in

economic production, while women took on more paid work to sustain the family financially. Miao men were acutely aware of the economic opportunities available to them through the work undertaken by the women and the commodification of Miao embroidery. Consequently, they were mostly willing to take on domestic responsibilities, including being the primary carer, especially when the women were away. In other words, they were willing to rearrange the gendered division of labour at home as a way of combining family resources to lift their living standards and even build wealth.

The majority of men in Butterfly Village would spend much of their time socialising outside the home, which was traditionally a male space. It was a common sight in Butterfly Village to see men leisurely hanging around outdoors while women spent hours indoors producing embroidery. This trend was particularly pronounced in the households where the embroidery business was the main source of income. Because women had a greater capacity to make cash, they were busier as there was an expectation that they manage the dual roles of being both the provider and the carer, while men had much more leisure time. The increase in women's status and decision-making power needs to be understood as coinciding with an increase in labour responsibilities for them in both public and private spheres, while men's reduced status in the household gave them a secure source of income from the women's labour as well as increased leisure time.

The gendered redistribution and reorganisation of leisure time in Butterfly Village provides another parallel to Western societies. There is an argument that despite

women's greater workforce participation, the total number of paid and unpaid work hours for both men and women has remained fairly equal in certain Western context, and therefore the amount of free time both groups have been also similar (Bittman & Wajcman, 2000). However, there is a crucial difference in the nature of the leisure time the two groups are able to enjoy (Passias, Sayer & Pepin, 2016). Miao men's leisure time tends to be away from home, and popular activities include watching and betting on bird fights in the village square, playing music, and travelling in the mountains. Miao women's leisure mostly involves talking to friends while embroidering, having dinner with female relatives, and dancing with female neighbours. As in the findings from selected OECD countries (Bittman & Wajcman, 2000), women's leisure time is fragmented between work duties, such as embroidery production, and caring for the family at home. Miao women lacked opportunities for pure leisure time away from other duties, while their male family members took their leisure at their own time and place. This was partly because of the intertwined nature of their gendered labour and the types of pastime favoured by men and women. But it was also partly due to the fact that Miao women spent more hours working the "double shift" of unpaid care labour at home, while also producing and selling their embroidery both at home as well as in the public sphere in and outside the village.

By relinquishing paid work while taking on unpaid domestic responsibilities, Miao men on average did not experience a change in their overall working hours. Since some unpaid care duties were still undertaken by wives, and shared with grandmothers in many cases, men either maintained, or even increased their leisure time. Miao women increased their negotiating power, which might have allowed them to secure more leisure time. But this increased power had to do with the fact that both embroidery

practice and unpaid care duties were closely tied to the image of an ideal woman. To abandon either would compromise their credibility as Miao women. Just as in many Western societies, the distribution of leisure time was unequal in Butterfly Village due to gendered ideas associated with different forms of labour. But the outcome was different in Butterfly Village because the nature of the paid labour Miao women engaged in was significant to the Miao ethnic culture and identity.

Women's increased earning capacity changed the perception towards paid work itself over time. That is, as more Miao women entered embroidery businesses and their paid work became normalised, some Miao men began to view earning money as a women's role. For example, prior to 2009 Ren had long been a migrant worker in cities as the primary breadwinner for his family. Then his wife, Ju, began to receive orders for her embroideries to supplement the family income. As Ju's business expanded, Ren gradually stopped sending remittances, then returned to the village permanently. Ren's reason was simple: since his wife was now able to make enough money, he no longer needed to work. Other men actively pressured their wives to engage in embroidery work to bring money home. For instance, Fa was reluctant to sell her Miao embroidery, but her husband accused her of failing in her duties as a wife. Fa recollected his scornful remark: "He told me I'm not a good wife, and he envied other men whose wife willingly sold her embroideries to sustain the family." It is important for women in Miao villages to maintain a reputation as a good wife and mother because divorce is rare and stigmatised, especially for women. This echoes the history of marriage as a patriarchal institution in other parts of the world.

Faced with a rapidly changing local economy, the existing gender divisions of labour changed over time, which also disrupted the disparity between the genders. On the one hand, men cooperated with, and even encouraged women's embroidery businesses because they valued opportunities to increase the family's income level. Culturally excluded from embroidery production, which was monopolised by women, they had little choice but take on more household chores to allow women to make and sell embroidery. In this sense, Miao men and Miao women collaborated to draw on their ethnic cultural resources to increase their wealth. On the other hand, women's profiting activities and their increased status and autonomy threatened male patriarchal authority.

In response to this situation, men tended to take one of two approaches. They responded either with a hands-off approach of letting women balance their breadwinning and their family responsibilities, or they actively pressured women to earn more money. Both functioned to keep, or even reduce their own overall workload. In other words, the men of Butterfly Village sought to continue to exercise their control over women's labour while securing or enhancing male entitlement to leisure time. As they did so, men relied on gender ideals of a good wife/mother.

Second wave feminist scholars debated the relationship between capitalist oppression and gender oppression. Engels (1973) advocated for the entry of women into the paid workforce, believing it would equalise their economic status with that of men's and free them from monogamous marriage, which he saw as an institution of private property dominated by men. For this reason, he considered the proletarian family more egalitarian, assuming that women's wage-earning power (as well as their lack of private

property in the household) equalised the husband–wife relationship. The later Marxists similarly argued that the fact that the division of labour, a product of the industrial era, was brought about by capitalism and oppressed women as well as men. Their view was that because women's reproductive labour occurred in the private sphere, it appeared to serve men's needs, when in fact, it was serving capital (Hartmann, 1979b). Therefore, in order to be liberated from capitalism, both men and women needed to work in the public sphere, as well as socialise reproductive labour. That is, they needed to reconceptualise all forms of labour as public work. However, my findings from Butterfly Village clearly show that men still benefitted from women's labour due to the patriarchal culture of the community. Even though Miao women's cash-earning capacity and status in the family increased significantly, and that many Miao men now performed unpaid care labour, Miao society still maintained as much of a gender imbalance in the embroidery economy as in the agrarian economy.

This gender imbalance also reflected in the situation of Miao women who earnt a living in other ways. In Butterfly village, the Miao embroidery industry has been controlled by the 'first generation' of Miao women. They have accumulated social and economic capital since the 1980s, and continued to expend their businesses in the next few decades. This had the effect of locking most young Miao women out of embroidery business opportunities, who then increasingly left for cities in search of wage work. However, these young women's wage work (whose work—the first generation, or the young women??) was viewed as less significant than their husbands' wage labour, and motherhood and unpaid care work at home continued to be seen as their primary duties. In reality, poorer women often performed tasks such as farm work in addition to house chores and caring for children and the elderly, while their absent husbands send

remittances, sometimes irregularly, from various cities to which they migrated.

Elderly Miao women also carried a heavier burden compared to their spouses. Similar with most rural areas of China, the elderly count on adult children's financial support (Cao et al., 2012), and received minimum living allowances from the local government (Wang, 2006). When adult children migrated to cities to earn money, their older parents usually become responsible for looking after their grandchildren, and this caring role was overwhelmingly performed by the women, while their male spouses continued to control the household budget. That is, even when both partners are engaged in non-wage work at home, men hold considerable influence in the family economically.

In this chapter, I have discussed how the embroidery economy led to changes in the gendered division of labour and the gendered notion of paid labour among the Miao in Butterfly Village. Before the commodification of embroidery, both men and women comprised the main agricultural labour force. On top of this, women undertook most domestic chores. With women's expanded earning power derived from their embroidery businesses, men had to undertake women's work. This created a shift in the traditional gendered division of labour. For Miao women, on the one hand, they enjoyed an enhanced status, increased autonomy and decreased economic vulnerability. On the other hand, their emerging and unfamiliar status brought them responsibility and even became a burden. In response, Miao men were at best ambivalent. On the one hand, they saw economic opportunities in the embroidery economy business to increase their family income, and then cooperated with women by taking on household chores. On the other hand, they sought to maintain their control over women's labour while securing or enhancing their own entitlement to leisure time.

Miao women's commercial embroidery practice not only shifted the gender relations in the family, but also reshaped the local understanding of gender ideals. The ability to embroider has been an important criterion of a traditional 'good woman'. As my analysis has shown, however, the commodification of Miao embroidery transformed this norm by adding not just the expectation of being able to produce traditional embroidery, but also to earn an income from it. This income is a new index of valued femininity. That is, the measure of the ideal Miao woman has changed from a good embroiderer to a good producer and seller of embroidery. In this period of remarkable economic and social change in the village, the transformation of Miao embroidery practice reconfigured not only gender relations but also produced a new female subjectivity, which I will discuss in detail in Chapter 9.

Chapter 8 The Changing Concept of Authentic Embroidery among the Miao

At a craft market in Butterfly Village, I witnessed two domestic visitors standing at a stall that displayed various embroidered products. They were browsing and picking up one embroidered piece after another in search of something that would grab their attention. One asked her companion, “Are they authentic Miao crafts?” “I don’t know. Who knows?” came the reply. They hesitated, debating whether to buy the colourful embroidered piece.

As a popular ethnic tourist attraction, domestic and international tourists descend on the remote mountain area dominated by the Miao. During my fieldwork, I spent countless hours at craft markets accompanying and sometimes helping Miao women in embroidery businesses and observing the flows of people and their interactions. Tourists eat dyed and steamed five-colour glutinous rice, listen to antiphonal singing accompanied by the sounds of wooden drums, and photograph Miao women dressed up with splendid silver ornaments and brilliantly embroidered costumes. Many tourists are not content just to experience Miao culture, but also desire to “buy a piece of it” and bring it home. They gather together in Butterfly Village’s craft market, choosing something that appeals to their aesthetic taste. Most tourists lack the knowledge to assess the authenticity of these glittering knickknacks, however. Few ask the sellers—usually Miao women—for their opinion, as if Miao women could not tell the authenticity of the products they sell or would not disclose their knowledge. But what *do* Miao women think about the authenticity of Miao embroideries in the age of ethnic

tourism and the commodification of traditional embroidery?

This chapter answers this question by examining Miao women's own interpretations of Miao embroidery and its authenticity in the context of large-scale social, economic and cultural transformation. The chapter is divided into two parts. First, I summarise and analyse existing anthropological research on the authenticity of ethnic crafts since the 1970s. Second, drawing on my fieldwork, I explore Miao women's narratives regarding the authenticity of Miao embroidery. Based on my analysis, I argue that Miao women creatively engage with the concept of authenticity in a way that adapts to the changing social and economic environments of embroidery production in an increasingly capitalist context. The ways in which Miao women grapple with external cultural expectations as women from an ethnic minority both maintain and transform the meanings and practices associated with embroidery as a traditional ethnic craft.

Ethnic Crafts and the Question of Authenticity

Much of the anthropological literature in material culture has focused on the question of the authenticity of ethnic art and craft (Fillitz & Saris, 2012; Bendix, 2009; Grijp, 2009; Cohen, 1995). One influential approach views authenticity as an inherent characteristic of ethnic craft itself, which is assessable based on a specific set of criteria (Cornet, 1975; Handler, 1986; Moore, 2008). This approach treats authenticity as independent, an objective feature of the object as opposed to something that is negotiable or changeable. Given these characteristics, some anthropologists use the term "objective authenticity" for this approach (Chhabra, 2012; Field, 2009; Reisinger

& Steiner, 2006; Wang, 1999).

While the anthropological literature on authenticity criteria is vast, earlier theorists focused on three aspects: production methods and aesthetics; producers; and the social function of the objects. In terms of both production methods and aesthetics, adherence to tradition is an important criterion used as evidence for the authenticity of an ethnic craft. For example, Fine finds that the ethnic crafts made by tribal artists are "too childlike" and "too toylike" (Fine, 2006, p. 313). Instead of being a marker of inauthenticity, however, Fine sees unsophisticated use of design, pattern and colour choice to reflect an authentic ethnic tradition that has been untouched by modern (Western) culture. It is this sense of authentic cultural preservation for which (Western) tourists pay for ethnic crafts. Hand-made crafts are viewed as embodying the continuity of authentic ethnic traditions while mass-produced craft items are labelled as flashy and artificial (Ichaporia, 1980, p. 45). That is, once industrial technology is integrated into the production of ethnic crafts, it indicates the loss of authentic ethnic tradition. In other words, authentic ethnic culture is conceptualised in opposition to the (Wesetern) industrial civilisation, and dichotomises modern and premodern.

This view of the authenticity of ethnic crafts requires them to be produced locally and by people from ethnic minorities. For example, Henri Kanmer considers that an authentic African sculpture is "executed by an artist of a primitive tribe" (1974, p. 5), while "obviously, an object made outside of Africa is unquestionably a fake" (1974, p. 10). This viewpoint was formalised in Errington's research on authentic "primitive art". According to Errington, authenticity relates more to the producer than the object they

produce, as “authenticity designates that the artist is an Australian aboriginal or Native American” (1998, p. 141). Grijp also argues that non-Western societies have been influenced by the cash economy, but he still demands that a Tongan ivory sculpture be produced by Tongans rather than Chinese, if it is to be authentically Tongan (2009, p. 138). Larry Shiner is more direct when he states authoritatively that “authentic artefacts should come from a world of the unspoiled, pre-contact ‘natives’ who live in another time than our own” (1994, p. 225). Many anthropologists insist on the inseparability between local artisans and ethnic crafts as an important standard of authenticity.

In terms of social functions, the common view has often been that authentic ethnic craft should be used by members of the local community to maintain traditional customs. Indeed, the emphasis is that the supposedly original purpose of producing ethnic craft was for ceremonies, rituals and other traditional activities as an ethnic group. For example, an authentic mask should have been worn by a local participant in a ritual (Fillitz, 2012, p. 138). This view renders surface scratches, patina and other traces of wear and tear as verification of the authenticity of an object for many anthropologists and private collectors (Corent, 1975, p. 52). In addition, the authentic essence of a culture is considered to derive from its embeddedness in the locality from which it originates. For instance, Brian Spooner considers that the authenticity of an oriental carpet is not demonstrated in its appearance and quality, but derived from the context in which it is made and used: “the rug was made in its own exotic production process for its own exotic purpose” (1986, p. 222). From this perspective, authenticity is lost when ethnic craft items are produced as export products for users external to the ethnic community and to play functions foreign to the ‘original’ ethnic tradition, resulting in the loss of the cultural significance and continuity (Boas, 1955). For adherents of the

essentialised notion of authenticity of ethnic crafts, their industrialisation and commodification utterly ruin their value as a symbol of unchanged, unspoilt traditional ethnic culture, which is imagined to be non-materialistic and pre-capitalistic (Meethan, 2001, p. 28). Therefore, the practice of defining, assessing and judging the authenticity of ethnic crafts can be seen as an anthropological pursuit of cultural otherness (Lindholm, 2008).

The essentialist concept of authenticity regarding ethnic crafts has been heavily influenced by "exo-nostalgia", a key anthropological paradigm that developed in the nineteenth century (Angé & Berliner, 2016, p. 19). This was a time when Western societies were undergoing the process of organised industrialisation, which would cause irreversibly changes, and anthropologists sought to locate the 'vanishing past' in non-industrialised societies outside of the West. In this academic tradition, the organisation of such societies is thought to lead to "other people's cultural loss" and "they lose what we want" (Meethan, 2001, pp. 4, 110). Early anthropological approaches like "objective authenticity" were the product of Western modernity, a quest to find authentic, exotic and unchanged expressions of culture such as ethnic crafts.

The concept of authenticity relies on the idea of an ethnic tradition frozen in a time and place, and this has been increasingly questioned in recent decades. Critics point out that anthropology has long been a discipline that not only examines, but also constructs "other cultures" (Fabian, 2006). As it does so, its links to colonialism means anthropological perspectives on the Other are hardly neutral or 'objective'. The

depiction of non-Western cultures as exotic produces and reinforces the West's imperial ambition to cultivate its own superiority through hegemonic discourses (Kapferer, 2013, p. 813). The equivalence between authenticity and unchanged tradition is untenable, as anthropological reflections on the concept of culture have taught us since the 1970s. British and American anthropologists have gradually rejected tradition as a static, homogeneous concept. One of the most influential works in this area is Hobsbawm and Ranger's *The Invention of Tradition* (2004). This seminal book explains that European nationalists adopted and employed traditional customs and costumes to establish an inseparable relationship between the past and present in the nineteenth century. Traditions have been selected and reconstructed using material culture or ideology. Such 'ancient traditions' are used in the formation of new nations for "legitimizing institutions" and "establishing social cohesion" (Hobsbawm & Ranger, 2004, p. 9), fostering people's identity and loyalty using a constructed history. Therefore, the authors use the term "invention" to challenge the notion of tradition as given and essential.

Furthermore, many anthropologists argue that such a thing as an unchanged and enclosed tradition is non-existent. Ethnic groups' "ancient traditions" have formed in dialogue with outside cultures (Fillitz, 2012, p. 128). Accordingly, the original materials, skills and patterns of ethnic arts continually change through the incorporation of stylistic features from other cultural traditions. For example, because of the constant trading between Portuguese and African aboriginal peoples in the sixteenth century, the traditional and unique aesthetic style of the Sub-Saharan woodcarving has been a product of the mixture of various African groups and European art traditions (Shiner, 1994, p. 225). Because different cultures have long, interconnected histories, it is

misleading to speak of any kind of "pure" or "essential" expression of a specific cultural group.

Since the 1980s, anthropologists have increasingly argued that there is no unified, constant and all-encompassing definition of authenticity (Lindholm, 2008), and that the interpretation of authenticity should be based on specific social and cultural contexts (Field, 2009). Accordingly, the anthropological examination of authenticity has shifted from the static materiality of ethnic crafts to their dynamic symbolic meanings in different societies, moving from objectivism to social constructivism. By complicating the boundary between authenticity and inauthenticity, anthropological research on ethnic authenticity pivots on the diverse and multidimensional interpretations and with greater attention to the interaction among culture, power and agency.

At the heart of the anthropological debates regarding the authenticity of ethnic crafts are ethnic crafts produced for tourism. Anthropological studies of the authenticity of ethnic crafts and their authenticity have gone through two stages (Cohen, 1995). Early studies condemned tourist art as mere consumerist fakes. *Tourism Research* published a special issue on the study of ethnic tourist art, where anthropologists including Nelson Graburn examined the changes of ethnic craft in the context of the growing tourism industry (1984). However, later anthropological work recognised that the criteria to measure the authenticity of tourist art varies, depending on different agents' evaluation (Swanson & Timothy, 2012; Phillips & Steiner, 1999; Cohen, 1993a). In 1993, the same journal published a special issue titled "Investigating Tourist Arts", which again focused on the issue of authenticity. By this time, it was understood that tourists,

collectors, scholars and locals have different criteria for the authenticity of tourist art.

Most anthropologists have focused on how tourists judge the authenticity of tourist art. In general, the evaluations tourists make about whether the art they see while travelling is authentic depends on their stereotyping of other cultures, as well as their own cultural background, their gender, age and personal experience (Reisinger, 2006; Smith, 2006). Specifically, tourists judge the authenticity of tourist art mainly by focusing on three aspects. Firstly, from the visual aspect; authentic tourist art should conform to the tourists' aesthetic tastes (Kasfir, 1992). Secondly, while purchasing art, witnessing the experience of local life adds to the perceived authenticity (Kim, 2001); purchasing an item from a street stall seems more authentic than purchasing it from a supermarket. Thirdly, from a practical perspective, the price, utility and portability affect tourists' judgment of authenticity (Kim & Littrell, 2001). But these factors are highly contextual. For example, an investigation of the purchase of Talavera potteries in Spain has found that domestic tourists judge the authenticity through the patterns of potteries, while international tourists value the fact that producers are locals (Revilla & Dodd, 2003). In Smith and Olson's statistical analysis of Western visitors' consumer preference in Asian countries, first-time visitors valued traditional styles of ethnic crafts, while repeat visitors preferred the creative style of individual artisans (2001). Influenced by deconstructivism, some scholars argue that, in fact, tourists do not care about the authenticity of the art itself, because once they achieve a respite from daily chaos in the act of purchasing, the sense of freedom they feel produces the authenticity of experience (Cohen, 2010; Yang & Wall, 2009; Olsen, 2002). These studies have highlighted the ways in which tourists subjectively create meaning and authenticity when purchasing ethnic art, demonstrating that the perception of authenticity is individual, diverse and fluid.

At present, anthropologists avoid entanglement in binary notions of authentic/inauthentic (Theodossopoulos, 2013; Esperanza, 2008; Wherry, 2006; Salamone, 1997), and instead explore the hidden meaning of different agents' constructions of the authenticity (Y. Zhu, 2012; Maruyama, Yen & Stronza, 2008; Wherry, 2008). For example, from the state's perspective, the construction of authentic ethnic craft relates to the political acceptance or rejection of the ethnic groups in question (Yang, Wall & Smith, 2008). The designation of authenticity to an ethnic craft by the state signifies the inclusion of a particular ethnic culture in the imagined nation. By contrast, branding works as "inauthentic ethnic craft" is an expression of the state's rejection of the ethnic group, which would then lose their legitimacy in the national cultural territory (Fillitz & Saris, 2012). From the perspective of collectors, collecting authentic ethnic craft is a representation of cultural taste, which in turn produces and signifies class distinction (Chibnik, 2003). Most importantly, anthropologists have recently turned their attention to how ethnic groups interpret the authenticity of their own traditional crafts in the context of their historically and culturally shaped ethnic identity, the development of ethnic tourism and the commodification of ethnic crafts (Croes et al., 2013; Grijp, 2009; Maruyama et al., 2008; Coote, 1992).

Studies have found that, for ethnic craft producers, the commodification of ethnic craft does not automatically imply the degradation of its authenticity. For example, Santa Fe in New Mexico is known for a number of Native American art markets in Pueblo communities where collectors and tourists can visit to buy ethnic crafts directly from the locals. For Native American artists and craftsmen, making crafts is both a traditional activity and a means of livelihood. In order to balance tourists' needs, traditional aesthetic patterns and individual styles of creativity, producers vary the materials,

patterns and functions. Local artists and craftsmen insist that catering to tourists is not a compromise of authenticity, however, as they believe the use of traditional skills in the production process guarantees the authenticity: “We made it by our hands and we signed it, and it has unique meaning to them [sic].” (Maruyama, 2008, p. 463). Similarly, the indigenous people in Aruba do not consider selling crafts to tourists as causing any loss of authenticity to their work, as they understand that the organisation of their wares represents the Aruba culture and maintains their cultural identity (Croes et al., 2013). In order to attract tourists, Aruba artists paint colours on yarn patterns. While anthropologists in the past interpreted this practice as kitsch rather than an authentic craft production embedded in religious meaning, local artists argue that such colourful commercial yarn painting is still a representation of Aruba culture because it depicts mythological figures and stories, integrating their emotion and interpretation of religion (Coote, 1992). As these examples demonstrate, authenticity is constructed in cultural practices—from bodily practices of making and ordering crafts to artistic practices such as drawing, and it is in this process that ethnic artisans express their own understanding of their culture. Therefore, the authenticity of ethnic crafts hinges on the ethnic producers’ cultural practices, rather than the status of their crafts as commodified or non-commodified objects.

Furthermore, artists link authentic ethnic crafts with the makers’ individual aesthetic styles and artistic pursuits. Ethnic crafts, on the one hand, are the visual representation of a collective culture. On the other hand, they are the creation of individual artists. In this sense, local artists’ recognition of an authentic crafts depends on whether this object faithfully and vividly reflects their artistic creativity. For example, wood carvers in the Kingdom of Tonga view old styles of woodcarving as replicas, because “the example

is already there from the past." They are keen to draw inspiration from the communication with the outside world, and then translate new ideas in their woodcarving techniques (Grijp, 2009, p. 132). In this sense, their pursuit of authenticity is close to the philosophical meaning of authenticity: "I am authentic … if my life is a direct and immediate expression of my essential being, that is, if I am true to myself" (Lindholm, 2008, p. 363). For the Tongan woodcarvers, not just their ethnic identity but also their identity as artists and craftsmen affect their individual interpretations of authentic ethnic crafts.

To sum up, understanding the authenticity of ethnic craft from local perspectives is meaningful not only because it emphasises the socially constructed nature of authenticity itself, but also because the ethnic cultural subjects have the right, authority and power to decide what is authentic.

In the development of ethnic tourism and cultural commodification, ethnic groups are not passive objects of outsiders' consumption. Through their own interpretation of authenticity, they express their emotions and thoughts regarding their cultural practice, as well as insist on (re)producing their collective culture in their own way.

Miao Women's Interpretations of Authentic Miao Embroidery

In this section, I will examine how Miao women interpret the authenticity of their embroidery. Each of the three examples below demonstrates that Miao women see

authenticity in unlikely places. Miao women exercise agency to ascribe different meanings of authenticity depending not only on the quality of the object itself, but also the identity of the producer, the methods of production and the purpose of consumption. The discussion below shows that the process of authentication is ongoing and adaptive to changing environments.

Great-Great-Grandmother's Embroidery

As explained in Chapter 3, the commodification of Miao embroidery in Butterfly Village began in the mid-1980s, due to the transformation of folk and ethnic crafts into collectible items during that period, and the opening up of the village to tourists in 1984. Private collectors had begun travelling to Butterfly Village not only from Beijing, Zhejiang and Taiwan, but also Japan, France and the United States. The sole purpose of most collectors was to collect vintage embroideries. One influential private collector, who owns 6,000 pieces of old Miao embroidery, has specific criteria for selecting his prizes: those made in the Qing dynasty (1636–1912) that are handed down from generation to generation, and preserved in remote Miao regions (Fu, 2007). His personal criteria have become a popular measure to value Miao embroidery by among collectors, and later become entrenched in national and even international ethnic craft markets.

The criteria collectors use have greatly influenced how tourists perceive the authenticity of Miao embroidery. "It looks new" is the most common refrain one hears from tourists as they dismiss a Miao embroidery as unworthy of their investment. Given this specific consumer taste, Miao embroidery sellers have developed a strategy to meet the demand

for old pieces of embroideries without parting with vintage pieces in their private possession: to manufacture old-looking new embroideries.

I witnessed firsthand the production process of “vintage” embroideries by my Miao embroidery master Shuou while in Butterfly Village. It was on a searing summer morning and Butterfly Village was already melting in the sun. Most people stayed inside, while dogs relaxed in the shade. I walked in on Shuou packing several embroideries the size of B5 pages into a bag and preparing to go outside. When she saw me, she seemed embarrassed. I inquired where she was going with the bag of new embroideries. She hesitated for a second but said, “I am going to make great-great-grandmother’s embroidery.” With her permission, I accompanied her outside.

We walked south of Shuou’s house until we got to the river. There was a spacious open area where dances are held during ceremonies. It was noon, the hottest time of the day. Shuou put the brand-new pieces of embroidery on the ground, and then splashed water on their surfaces. The water seemed to sizzle slightly, before being absorbed in the fabric as the pieces dried. Shuou repeated this process six times until the colour began to fade. She explained that by not using setting agent on these pieces, the colours easily faded. Over the next three days, we repeated this process until finally the bright and brand-new pieces looked grey and worn. Shuou asked me, “What do you think of these pieces?” I replied, “They look used and aged.” Shuou was very satisfied with this answer: “See, I can make them old.” (see Photo 8.1. and Photo 8.2. below).

Photo 8.1. New embroidery.

Photo by author.

Photo 8.2. ‘Old’ embroidery.

Photo by author.

A month later, Shuou brought several ‘old’ embroidered pieces to a village fair held in Butterfly Village, where collectors and tourists came to buy Miao ethnic crafts. Quite a few tourists snatched them up without haggling. I heard one female tourist said to her companion: “Pieces like this are getting harder and harder to find.”

Afterwards, I asked Shuou whether she thought this amounted to cheating. Her heartfelt and impassioned response was not something I expected:

> I am confused why urban people like old embroideries. For us Miao, both old and new embroideries are real. But outsiders only count old ones as real. It makes me angry. Do they think only the old generations made embroidery and we do nothing? We are Miao people. We are making real embroideries just like our grandmothers did. I felt sad when I ruined those new pieces to make them look old. They were so beautiful.

An attempt to ascribe the guilt to either the consumer or the producer of fake vintage embroideries is not only pointless but also reverts to the concept of authenticity as singular and fixed. As discussed earlier in relation to ethnic crafts and the politics of authenticity, the value of Miao embroidery is not a simple reflection of its aesthetic style, even as the brilliant colour-matching and skills displayed are praised all over the world. For tourists, the value of Miao embroidery hinges on its ability to embody the cultural history and the timeless tradition. But to privilege this view over the Miao’s own interpretation is to dismiss the Miao people’s ability to define their own

subjectivities (Oakes, 1997). Instead, by asserting that her method of fading colours to create an effect of being old is still part of authentic ethnic craft production because she is a Miao woman, Shuou is forging her contemporary Miao identity.

Ghost-made Embroidery

Despite their differences, tourists, collectors and Miao people alike tend to value hand-made embroidery more highly than machine-made pieces. Tourists and collectors are highly invested in the romanticised exotic image of Miao people as an ethnic minority. In countless films and picture books, Miao women sit under the shade, wearing elegantly embroidered cloth and silver ornaments. Rustic bamboo baskets filled with textile, threads and needles sit beside them as the women embroider as well as sing, their voices echoing in the mountains. Such a depiction epitomises the outsider's image of Miao authenticity (see Photo 8.3.).

Photo 8.3. A typically romanticised image of a Miao woman producing embroidery.

Provided by *The Guizhou Daily*

Miao women themselves also view handmade embroidery as authentic, as opposed to the inauthentic machine-made pieces. As discussed earlier, ethnic artisans frequently view handmade production processes as a way to express their feelings about their culture and identity (Chibnik, 2003; Kleymeyer, 1994). Many Miao producers of handmade embroideries are proud of their heritage and the embodiment of lifelong mastery of craft-making skills. This is illustrated by the following interaction. Before leaving Butterfly Village, I searched for Miao embroideries to bring home as gifts. Due to the cost of handmade embroideries, I settled with machine-made purses and coasters with traditional Miao embroidery patterns on them. Upon discovering my choice, my Miao friends chastised me, calling it "fake Miao embroidery" and "ghost-made embroidery." They accompanied me to the market and picked some relatively inexpensive handmade embroidery pieces for me. When I held up one piece and complained about the rough and uneven surface, one of them said "I know it's not elegant, but it's real."

However, it is equally important to note that not all handmade embroideries are given equal accolades by the Miao. When the Miao embroider for themselves, the production process itself is more treasured as a pleasurable way to perceive the world through traditional symbols as well as an expression of creative individuality. As discussed in earlier chapters, embroidery as an embodied cultural practice is a process of gendered ethnic identity formation for Miao women (Harrell, 2009). However, when they hand-embroider 'products' by participating in the putting-out system (see Chapter 6), their priority is to complete pieces as fast as they can manage. Even when Miao women such as Shuou appreciate the beauty of small handmade embroideries produced for tourists, they would not see the commercial process of embroidery production as the most

authentic way to express Miao culture and identity.

The importance of the handcrafted nature of embroidery for Miao women also stems from the fact that this is the crucial advantage they have in the competitive and increasingly crowded Miao embroidery ‘industry' which non-Miao entrepreneurs seek to enter.

Since the 2000s, the Guizhou provincial government has invested in developing the ethnic cultural industry as part of its poverty reduction policies (see Chapter 6). Government subsidies attract not only Miao, but also some Han people to embroidery businesses. Using superior marketing knowledge and modern technologies, access to abundant funds and extensive social networks, many educated Mandarin-speaking Han have flocked to Miao regions in search of business opportunities. Miao women are generally wary of their presence, and some worry about the threat to their commercial viability. Fen, a middle-aged Miao woman who sells handmade embroideries to tourists, complained that some Han businessmen took her handmade embroideries so they could reproduce the traditional patterns and colour-matching in their machine-made products. “Tourists have no idea about the difference between the two, so of course they would buy cheaper machine-made ones. The Han are stealing our business!” Interestingly, Fen’s neighbour Xin comforted her in the following manner:

> Yes, they are smart, but not smart enough. Many Han people came to our village to learn embroidery skills by observing carefully and working so hard. But they all

> gave up sooner or later, without exception. They are naïve to think our skills can be learned so quickly. I started when I was six years old, and I still feel I'm not skilled enough to make beautiful embroideries.

Miao women like Xin are highly aware that their embroidery skills are the best weapon to compete with their non-Miao competitors. They actively market their 'superior products' by educating tourists about the authentic nature of their handmade embroideries as 'true' representations of Miao culture. To drive their point, the Miao call machine-made embroidery "ghost-made" in order to highlight the absence of embodied Miao skills behind the production process. As they proudly display their rough and overworked hands to prove the laborious nature of hand embroidery, they are staking a claim to the ownership over Miao culture, rather than being a passive victim of modern industry and the commodification of their culture. The long-term embodied practice of embroidery is crucial for them to have earned this ownership, rather than merely inherited it by lineage.

However, there exists another interpretation of what counts as authentic Miao embroidery among a small number of Miao people. Contrary to the dominant opinion, some thought machine-made embroidery was authentic, and rejected the label of "ghost-made". For example, Liuyu operated a machine-made Miao embroidery business in Kaili with her husband Feng (for a detailed description of their business, see Chapter 6). The best-selling product was a machine-made embroidery souvenir item with the same basic aesthetic characteristics of handmade Miao embroidery. Liuyu expressed her opinion that "machine-made embroidery could be as exquisite as hand-

made one. We have very advanced techniques to produce pieces with a very smooth surface, and few tourists could even tell they were machine-made. If they look identical, why should one be considered real and the other is fake?" Her husband agreed: "Do you think tourists would pay money to buy an ugly machine-made embroidery (*heise youling*)?[40] They like our pieces because they are as beautiful as the handmade ones, but much cheaper." As discussed earlier in this chapter, people develop their understanding of authenticity through an interactive process. The Miao couple took into consideration the tourists' perspective to challenge the dominant view in Miao society and redefine what authentic Miao embroidery means to them.

As discussed earlier in this chapter, people develop their understanding of authenticity through an interactive process. The Miao couple took into consideration the tourists' perspective to challenge the dominant view in Miao society and redefine what authentic Miao embroidery means to them.

Embroidery with Cartoon Character Designs

As discussed above, the Miao women of Butterfly Village have two sets of criteria for authentic Miao embroidery, which they deploy differently depending on whether they are engaging with other Miao people (insiders) or the tourism market (outsiders). Among the insiders, Miao embroidery is inseparable from ethnic clothing. As discussed in Chapter 4, ethnic clothes are an obvious visual symbol to distinguish different ethnic

[40] The literal English translation is 'black ghost'. For the Miao, 'black' means ugly, and 'ghost' refers to machine-made, as in soulless embroidery, as discussed earlier in this chapter.

groups (Weiner, 1989). The origin of ethnic clothes is thought to stem from the need of the members of an ethnic group to distinguish themselves visually from members of other groups (Eicher, 1999, p. 300). In this sense, the most important function of ethnic clothes is as a "surface marker of group differences" (Weiner, 1989, p. 25). In other words, ethnic clothes are a visual marker of the collective identity. However, among members of the same ethnic group, ethnic clothes can also express other social identities such as gender, as well as individual aesthetic taste whereby "individuals strive to differentiate themselves from similar others" (Fromkin, 1972). Therefore, ethnic clothes fulfil dual purposes. On the one hand, ethnic clothes signal membership to a particular group, be it ethnic, gender and other social groups, and therefore they emphasise traditional aesthetic qualities whose meanings are easily recognised by others within that community. When it comes to Miao people's gendered ethnic identity, both insiders and outsiders consider traditional embroidery patterns and bright colours as authentic visual markers of the Miao identity. On the other hand, ethnic clothes differentiate members of an ethnic group as individuals, and therefore highlight innovative, modern and more spontaneous aesthetic qualities. The following fieldwork observation demonstrates Miao women's full awareness of these dual functions, and how they display different forms of Miao authenticity in highly adaptable ways.

Wang noticed a cute, curious creature on the cover of a magazine a visitor had left behind at a village market stall. It was *Haibao*, the cartoon mascot of Shanghai Expo 2010, which resembles a blue stick figure (see Photo 8.4. below). She decided to embroider this image. Two months later, she proudly showed off her creation to other Miao women, who were full of praise. Within days, Wang participated in an ethnic craft exhibition in Guiyang. The judging panel consisted of academics and collectors, and they would select the

winning piece from all exhibited items. Wang's piece brought featured a typical traditional butterfly motif, a famous Miao ancestor (see Photo 8.5. below).

Photo 8.4. The official image of "Haibao".
Retrieved from: https://images.app.goo.gl/uJuuJMT5cfixiGBZA

Photo 8.5. Wang's embroidery.
Photo taken by the author.

I asked Wang why she did not choose the *Haibao* piece. Did she not consider it a Miao embroidery? She reasoned that while she thought the *Haibao* piece was beautiful, the

judges were uneducated about what counted as ‘real’ Miao embroidery as they practiced it. Wang continued:

> I mean, every woman looks for inspirations from TV, books and other new things. We are keen to make ‘new flowers’ [new embroidery patterns]. For us, what we hand embroider for ourselves is real Miao embroidery. But they don’t know that, so I prefer to wear traditional patterns so as to show them that I’m Miao beyond doubt.

The ways in which Miao women variously included certain forms of embroideries in their definition of Miao while excluding others exemplify the dynamic nature of the concept of authenticity of ethnic crafts. Miao women’s interpretation of authenticity is flexible and contextual. The authenticity of Miao embroidery can be deployed in a number of ways, ranging from easily recognisable symbols of traditional Miao culture and as part of marketing strategies at tourist markets to the physical manifestation of embroidery as Miao women’s embodied cultural practice and the proof of their ethnic identity.

The women’s assertions, claims and reactions vividly reveal that far from being passive and silent carriers of Miao culture, they are active and agentic individuals who seek to justify and explain the choices they make. They are aware that government brochures, art collectors and tourist imaginations insist on keeping the image of contently demure and passive Miao women frozen in time and space. They may even cater to outsiders’

needs or negotiate with them. But they also claim the right to define their culture in ways they see fit, even as their definitions continuously change form through interactions with changing social, cultural and economic practices. Miao women in Butterfly Village bring creativity not only to their embroidery patterns, but also to the ways they form modern, contemporary and gendered Miao identity.

In the next chapter, I will examine the impact of the representation and revitalisation of Miao ethnic identity through Miao women's commercial embroidery practices. It relates not only the relations between Miao women and their traditional culture, but also their community and the outside world.

Chapter 9 Modern Miao Embroidery and the Revitalisation of Miao Ethnic Identity

This chapter examines the impact that the commodification of Miao embroidery has had on the ways in which the Miao interpret and express their ethnic identity. The previous chapters in this thesis have shown how relationships between Miao villagers and with outsiders have shifted through increasing engagement of Miao with the new capitalist economy in China since the 1980s, the emergence and development of modern ethnic tourism, new methods of embroidery production and changing consumption practices.

The increased profile of Miao embroidery nationally and globally, and the economic, political and cultural attention it has brought to Miao communities has led Miao women to reevaluate their ethnic culture and revitalise Miao identity in the process. In this chapter, I will first explain how the Miao had previously internalised the devaluation of their culture by dominant national Han-centric depictions. Second, I will show how the commodification of their ethnic culture, in particular their embroidery, shifted this perception over time, with a focus on the period since the year 2000, and especially after 2010. Based on my analysis, I argue that Miao women's engagement with the commodification of embroidery has been a foremost force in the revitalisation of Miao ethnic identity.

The Representation of Miao Ethnic Identity Before 2000s

As explained in earlier chapters, Miao and other ethnic minorities have long been considered backward and inferior in Chinese popular and political discourses, in contrast to the Han who were supposed to be civilized and advanced (Yi, 2008; Litzinger, 2000). Miao women in Butterfly Village during the 1980s also sought out Western-style clothing. Those I interviewed looked back on this time and reflected that they valued the ability of such clothing to give them confidence to feel less *tu qi* (dowdy and rustic), and more *yang qi* (modern and urban) like the Han. The women reflected on how the time they considered it worthwhile to tolerate the discomfort of synthetic fabric ("it stuck to my skin when I sweated"), or the ill-fitting design ("bellbottoms looked ugly on me, I couldn't find my legs in them"). Traditional Miao clothes were considered a source of shame and a sign of one's provincial, 'backward' status as an ethnic minority.

Some Butterfly Village women tried to demonstrate their new modern status by creatively embroidering Han Chinese characters on their jackets. The photo below shows a part of an embroidered jacket cuff produced by my interlocutor Ge in her mid-30s during the Cultural Revolution (1966-1976). The cuff contains six embroidered Han Chinese characters. On the left hand side, the characters "抓革命 (*zhua geming*)" literally means 'grasp revolution', which originates from a quote by Mao Zedong, and which repeatedly appeared in editorials of the People's Daily during that period[41]. On

[41] The People's Daily (*Renmin Ribao*) is the most important official newspaper of Chinese Communist Party. Its editorials are especially used to convey authoritative statements of official government policy by CCP.

the right hand side are the characters “民族团 (*minzu tuan*)”, the first three characters of “民族团结(*minzu tuan jie)* (national unity)”, which was a commonly cited slogan throughout ethnic minority regions at the time to discourage separatist activities. Both phrases were ubiquitous political slogans[42] posted on walls, in leaflets and newspapers.

Photo 9.1. Part of an embroidered jacket cuff.

Photo by author.

In fact, Ge’s choice of the six characters was practical, rather than political, as they

[42] Political slogan was a crucial means of propaganda and mass mobilisation during the Cultural Revolution. The pervasive use of political slogans was a rhetorical strategy employed by the Chinese Communist party to try to control the minds of citizens, and to justify various actions and policies. For further information on this topic, refer to Xing, 2004.

consist of fewer strokes and are therefore easier to embroider. In order to achieve symmetrical design, she removed the last character "(结)" of the second slogan. She told me that she was nonchalantly apolitical, and her sole aim was to show to the visiting Han that she knew some of their language: "I felt frustrated when Han people said we Miao were less cultured, but it was too challenging to become fluent in their language." Ge, as most Chinese would have done back then (and still do now) equated being 'cultured' to literacy in Mandarin, thus reflecting their disdain of minority cultures (Safran, 1998). Ethnic minorities themselves often internalised this dominant Han perspective. In a study of Chinese Muslims, Dru Gladney remarked on his surprise that a Hui Hajji "said he himself 'had no culture' … [even though he] was fluent in Persian and Arabic and was a master of Islamic Natural Sciences" (1998, p. 59).

In the context of ethnic tourism and the commodification of ethnic culture, even as they sought to emulate urban Han culture, the Miao still needed to perform their traditional ceremonies and festivals in "the role of impoverished, rural tradition-bearers" (Schein, 2000, p. 262), in order to satisfy Han and other non-Miao consumer's desires and nostalgia for 'authentic' traditional culture. Many Miao women reluctantly dressed up in traditional clothes to be photographed by Han artists. During the earlier period of the modernisation of Butterfly village economy and culture, the unequal relations between the Han and the peripheral Miao put the Miao into the space of "compounded powerlessness" (Ortner, 1995, p. 184). It was in this context, during the early modernisation of Butterfly village, that Miao acutely experienced cultural self-inferiority, and the desire for modern identity as prescribed by the urban Han.

Through involvement the capitalist market economic regime, Butterfly Village experienced significant changes. The commodification of Miao embroidery had brought wealth to individual households, and the new prestige associated with coveted 'ethnic resources' (such as embroidery) lifted the profile of the entire village by putting it on the nation's economic and cultural maps. By around 2010, most Miao families had TVs, CD players and cameras, and there was a video store on the main street of Butterfly Village. As the economic status of Miao villages rose, their cultural status also underwent significant transformations, both within and outside of Miao communities. In this last section, I investigate how perceptions of Miao embroidery, and by extension, the Miao as an ethnic minority, have transformed both within Miao communities and in broader Chinese society, as the commodification of embroidery has become well established. I argue that even though the contemporary Miao embroidery industry is founded on the exoticisation of the Miao as a marginalised ethnic group, the industry has also impelled a revitalization of their ethnic identity in ways that can feel agentive and open-ended for the Miao involved.

The Politicisation of Clothing in China and the Elevated Status of Miao Embroidery

Since the 2000s, China's political leadership, social elites and the Han public more broadly have placed new emphasis on searching for and promoting an 'essence' of Han national cultural identity. 'Ethnic' clothing has played an important role in this yearning and newfound desire to revive Han culture, as a reaction against the growing influence of Western culture in China. Some scholars termed this phenomenon as "cultural root finding" (Chew, 2007) or "root seeking" (Leibold, 2010) to understand it in the context

of "cultural heterogenisation" and the increasing interconnections between cultures (Hodos, 2010). As one of the most visible markers of culture and ethnicity, clothing became a central part of this cultural root seeking process.

For example, at the 2011 Asia-Pacific Economic Cooperation Summit, the Chinese president Jiang Zemin presented himself to each attending leader in a 'traditional-style' Chinese jacket. This 'APEC jacket' was rapidly accepted by the Chinese public who, after 20 years of embracing Western clothes, yearned to find what could be understood as an 'authentic' Chinese dress to express their identity (Bulag, 2010)[43]. In 2003, the 'Han clothing' (*Hanfu*) movement began, calling attendances to wear Han clothing in public spaces, claiming that it was "purportedly first created at the time of the mythical figure the Yellow Emperor and worn for millennia by the Han" (Carrico, 2017, p. 36). The fear of losing cultural identity in the process of cultural homogenisation (in this instance through globalisation) can drive people to more explicitly preserve their own cultural uniqueness and reaffirm their local identity (Castells, 2006). Carrico argues that the Han clothing movement is a fight for "the Han and their tradition" (2017, p. 42), and the desire to transform "the unmarked, disenchanted, and modern Han" into something "newly marked, enchanted, and most importantly enjoyable" (p. 47). In this environment, the clothing styles of the Miao and other ethnic minorities become a proof of traditional knowledge and ethnic cultural diversity. The national and local governments increasingly deployed this to resist the perceived threat of Western

[43] The designers named the jacket the "Tang dress", in reference to the Tang Dynasty (618-907). Many scholars and elites have argued that the style of the APEC jacket was an updated form of the clothing worn by horsemen in Manchuria, an ethnic minority region. A lively debate ensued, reflecting the importance of the issue of national cultural authenticity. See Zhao, 2013.

cultural hegemony through globalisation. This is in stark contrast to other times in Chinese history, such as during the Qing Dynasty era, when the Han evoked Confucianism to devalue colourful ethnic attire as a public display of lack of virtue. This discourse contributed to justifications of the economic exploitation and political suppression of the Miao in their colourful embroidered clothing (Yang, 2010).

This significant transformation in Han attitudes towards ethnic minority dress has not gone unnoticed among the Miao that I spoke with. Tiange, a middle-aged woman in Butterfly Village recounted:

> I heard from older women that in the past, people laughed at their embroidered clothes as 'too colourful'. But when I wore my dress, Han people said my embroidery was beautiful and amazing. Some young Han girls even wished they were Miao because then they could wear these clothes. I was confused and wondered if they were only flattering me. But I did take it as a compliment. It made me feel proud and satisfied.

Most of my informants recalled receiving similar praise from tourists, artists and collectors with special interest in their culture, and also from ordinary Han Chinese. Following the relentless historical stigma that the Miao received for their cultural dress, this belated recognition from outsiders signaled to the Miao that their embroidered clothing as a marker of their ethnic identity now had a different symbolic meaning. This had a slightly different texture to the earlier exoticisation of ethnic minorities by the

Han, and boosted Miao's self-confidence as a people in the latest incarnation of Miao embroidery as a proxy for ethnic identity and belonging, as well as ethnic power relations in modern China. Previously portrayed by the Han as happy, primitive and demure women who embodied the feminised ethnic minority which was simultaneously idealised and looked down upon, Miao women have increasingly come to be seen—and more importantly, see themselves, as active agents.

Public Displays of Ethnic Identity and Confidence

In this newly favourable climate, Miao entrepreneurs have exhibited increasing confidence in their credentials and abilities. At the Guizhou National Folk Handicrafts Show in 2012 at Beijing's "798 Art Zone", I witnessed a scene that was indicative of such a trend. The exhibition was organised by the Guizhou Provincial Department of Culture and the Department of Commerce, who facilitated me obtaining a backstage pass. I followed Quijie around the exhibition. She was one of the "national representative successors of Miao embroidery" certified by the Ministry of Culture of the PRC in 2004. She entered the embroidery business initially by attaining funding from the provincial government to run a small embroidery studio in Kaili for her and her apprentices to produce small decorative embroideries for garment companies. She soon moved on to establish a more lucrative wholesale business as well as retailing the factory-produced items to tourists at higher prices. For Quijie, the Show in Beijing was an opportunity to promote her business and extend sales channels. In the exhibition hall, Quijie's stall happened to sit next to her supplier and competitor, Qianyibao Co., one of the largest cultural tourism product companies in Guizhou, that sells items such as silver accessories, batik textiles and embroideries (see Chapter 2 for a detailed

description of this company).

A dramatic scene ensued during the exhibition. In one booth, Quijie stood in her brightly embroidered Miao jacket covered with hundreds of flowers, vines, birds and other vibrant patterns. Manning the Qianyibao Co., booth beside her were two young Han employees in suits and ties. They sold machine-embroidered purses, coasters, scarves and other small items—mostly identical. As Quijie rearranged the items on her table into different sizes, colours and product types in slow, gentle movements, it was hard not to notice the sleeves of her jacket decorated by silk embroidery and small silver pieces dotted around it shimmering as it caught the light. She smiled every time a passer-by pointed a camera at her, and said to them: "I am glad you like my Miao dress. Come and have a look." Soon, an audience had gathered around her booth to ask questions while browsing her products. When a customer pointed at a fish motif embroidered on a purse and asked about its cultural meaning, Quijie eloquently narrated a story: "This traditional mascot in our culture boosts family prosperity and gives blessings to our descendants. You see, I embroidered the same fish on my jacket to carry the blessings of my ancestors with me." She did not flinch when some customers questioned the cultural authenticity of the cheap, mass produced products. Quijie gently responded:

> We Miao do not lie. Handmade embroideries are certainly nicer and dearer, because they take women years to produce. We cherish our art, and wear them on special occasions only. But you are not a Miao, so there is no need for you to buy expensive Miao embroideries. For us, embroidery needles and threads are like your

> pen. We use them to record our culture, our life, because most Miao women cannot read or write. So it's a necessity for us to produce and possess handmade embroideries. But these machine-made ones have the same designs as the traditional handmade ones, so they can still tell you the same age-old stories of Miao heroes, folklores, vibrant plants and animals. Fascinating, aren't they?

Satisfied with this response, the customers took a closer look at the products while echoing Quijie's words ("they are indeed interesting"). In the meantime, the two Han sellers looked on with frustrated, somewhat embarrassed looks on their faces. When I went over to ask them how their business was going, one of the men said "terrible, we can't beat her". At the end of the three-day exhibition, Quijie earned a total of approximately 30,000 *yuan* (AU$ 6,000), whereas Qianyibao Co., made only 4,000 *yuan (*AU$ 800*)*. Quijie candidly reflected on this matter, stating "Han people sell Han things. Miao people sell Miao things. That's natural. I am sure I am inferior to the Han sellers in many aspects. But when it comes to selling Miao embroideries, they can't beat me because of my unshakable Miao identity."

This episode illustrates Miao women's conscious utilisation of their ethnicity as a marketing resource to gain economic advantage, as a claim to the 'ethnic roots' of their craft, and their emotional attachment to this embodied tradition. Quijie displayed an authoritative voice as she balanced the narrative of authenticity and exoticism. Emphasising the ethnicity of craft products often creates a kind of cultural alterity (Kim & Kang, 2001) between buyers and products. Ethnic business owners frequently utilise "social features" for economic gain (Light & Bonacich, 1988, pp. 18-19). In these

instances, the commodification of ethnic identities prompts ethnic minorities to assert ethnically-based economic claims, which in turn encourages an assertion of a "more 'commercial' version of their identity" (Stephen, 1993, p. 28).

Moreover, displaying embroidery skills has blurred the public and private spaces of Miao women. In Yan's study of the rise of individualism in rural China, he examined the overturn of the "collectivist style individualization" (2012, p. 376) in the modernising period of the 1980s, when the market-led economic reform pushed for a more substantial change in the relationship between the state and the individuals. He argues that the awareness of individual rights increased and the boundary between the self and the other increased during this time, giving rise to the idea that the individual was set apart from 'work units' of the family, the clan or the state. This transformation was observable in the organisation of village residents' living space. For example, the popularity of building separate bedrooms articulates people's desire for private space to protect personal privacy and enjoy intimate relationships. In this context, Miao women's spatial engagement also changed. Even as the importance of individual privacy grew in the village, commercial necessity had turned their embroidery production into a lively exotic spectacle for tourists' consumption. Miao women such as Quijie had become used to been 'gazed' at by tourists in not only museums and exhibition halls but also their villages and even homes. As a result, their experience of the distinction between the public and private spaces is more closely related to MacCannell's concepts of "front region" and "back region" in relation to tourism (1976). The front region is the space where hosts and guests interact with each other, and the back region is the intimate space where tourists are barred from entering. As reflected in MacCannell's arrangement of six stages from the front to the back region,

the boundary between the front and the back regions are fluid and negotiated between tourists and the host communities. Some intimate space could transform into public space, and vice versa (1976, pp.100-101). That is, Miao women's understanding of the public/private space not only stems from the rise of individualism and the transformation of individual-state relations (Yan, 2012), but is also influenced by the changes in the tourism market. For example, In the past, Miao women embroidered clothes inside their house or at the doorway on sunny days. They understood these sites as the private space. However, the doorway has become a public space when the act of embroidering became a new tourist attraction in 2006, when the Miao embroidery skill was included in the first national intangible cultural heritage list. Miao women have become accustomed to being watched and photographed by tourists while embroidering at the doorway: a new "front region" to perform their culture in front of tourists.

It has now become commonplace for well-connected Miao women to utilise their ethnic identity as a means of not only amassing economic benefits at the individual level, but also of participating in political life in China more broadly. Without exception, these women are seen wearing embroidered clothing when they appear in media reports or attend formal occasions calling for greater political participation of ethnic minorities, the development of ethnic minority regions, or the protection of their cultural and social rights. In colourful embroideries and silver decorations, they stand out amongst Han male politicians, business leaders and other powerful actors in the same room.

It is noteworthy that some public displays of Miao identity among women are becoming divorced from their expertise in embroidery matters, which were a prerequisite to their

entrepreneurial successes and access to new forms of power (see Chapter 5). Lei Yan is one such case. She is a Miao singer from Guizhou, and as a Deputy of the Miao National People's Congress, she advocates for state-led projects to promote Miao cultural knowledge and expertise by presenting it as an endangered national treasure. In March 2013, *The People's Daily* reported an interview with Yan, within which she expressed her hopes to bring more attention to the wellbeing of Miao communities (Zhang & Yang, 2013). Miao embroidery was at the forefront of her discourse:

> The embroidered clothes I'm wearing today took a dozen Miao women two months to make. They hope you can recognise and appreciate the beauty of their craft. In the context of rapid socioeconomic changes, it would be a pity if Miao embroidery skills were lost and we could not see this beautiful craft.

I had the chance to interview Lei Yan at a Guizhou provincial museum at the end of 2013, where she was invited for an exhibition opening as a Miao representative, as well as a semi-official participant. I was surprised to discover that she had little personal interest or skills in embroidery. She explained:

> When I was young, I spent more time singing than embroidering, so I'm not good at it. But it's OK, I don't wear Miao clothes often. I'm not that interested in embroidery personally. But I deeply believe it is an indispensable part of Miao culture. As a Deputy of the Miao National People's Congress, it's my duty to lobby for government support to maintain Miao culture.

Lei Yan echoes a widely held sentiment among Miao women that greater political representation is necessary in order to compete for government resources and tourist dollars among the 55 designated ethnic minority groups in China. As women like Lei Yan continue to assert the importance of their culture for the region and the nation at large, embroidery may become increasingly emblematic of Miao ethnic identification (Rosaldo, 1989). However, these emerging strategies through which Miao women are claiming and asserting their ethnic identity are not merely about gaining economic and political resources. The work of crafting and displaying Miao embroidery is part of the work of crafting a modern Miao ethnic identity at present.

Renewed Confidence as Miao Women

As abovementioned, the revitalisation of Miao ethnicity is not attributed to purely instrumental purposes. A profound emotional attachment to embroidery as a central part of Miao cultural identity is also evident in Miao women's non-commercial, unofficial and daily embroidery-related cultural practices.

Firstly, Miao people are experiencing increasing levels of pride and confidence in their identity. In contrast to the past when the Miao flocked to shops to purchase Western style clothing as a sign of modernity, Miao people in Butterfly Village today are more comfortable choosing to wear what they see fit, without as much concern for external opinions. Although cheap and comfortable Western clothes such as T-shirts and trousers are still popular among Miao women, and are readily available at local markets, increasing numbers of Miao women are choosing to wear Miao dresses, both machine-made and handmade. They prefer to wear Miao attire when they visit each other's

houses, attend cultural and social events, and travel. Many consider Western clothes as handy and practical, and more suitable for doing manual work and labour, for instance, while Miao clothes are valued for their aesthetics. The renewed confidence of Miao women to wear traditional dress was on display when I arrived at a local Miao wedding in a fashionable Western-style dress. When I casually asked several Miao women present whether they liked the dress, one of them responded bluntly that she thought that the host would be offended if she wore such 'boring' and 'plain' Han clothes to the wedding, instead of a beautifully embroidered Miao dress. In this moment, I understood her comment as claiming a sense of superiority and pride in her culture over dominant Han culture, which she viewed as somewhat generic and 'boring'.

I also often noticed during my fieldwork that Miao would explicitly present their ethnic identity when interacting with outsiders. For example, although most Miao women in Butterfly Village were not proficient in Mandarin, they all knew how to say "I am a Miao (*wo shi Miaozu ren*)." Many of them could even say the same phrase in English, French and Japanese, frequently using this statement to open a conversation with outsiders. They also frequently expressed their ethnic identity in non-verbal modes. My embroidery master explained the changing attitudes in her community:

> Previously, we were reluctant to admit that we are Miao. We wore similar clothes to the Han, to avoid people's attention when outside of the village. We also felt embarrassed when strangers asked whether we are Miao. Being a Miao was not an honourable identity in those years, as Han people despised us and thought that our Miao people are backward and poor. But now, we are proud of our Miao identity.

> We are not only economically benefiting from this identity, but also earning the respect of others.

In the final section below, I will examine how the entrenched commodification of embroidery is injecting fresh energy into its reinvention as a distinctly traditional as well as modern Miao practice.

Traditional and Modern: Miao Women's Practice of Embroidery in the 21st Century

In present-day Butterfly Village, interpreting Miao embroidery both as traditional and modern is not considered antonymous or contradictory on the whole. Older Miao women tend to have a renewed interest in protecting embroidery as their traditional practice. Some take it upon themselves to collect and preserve vintage embroideries. Private Miao embroidery galleries and museums have sprung up all over Guizhou since the early 2000s. Most of these are started and run by Miao women, with financial support from provincial and prefectural governments. They invest time, effort and money to collect elegant Miao embroidered clothes, and exhibit them to the public free of charge. Most gallery and museum owners that I spoke with are motivated by cultural heritage protection, and insisted that they would not sell Miao embroideries. Tianlan, a 56-year-old Butterfly Village Miao woman who runs a small ethnic artifacts museum in Kaili, explained:

> I regret selling too many embroidered pieces in recent years. I was desperate for

> money during that time and didn't think about the significance for the Miao as a group. Some collectors are willing to pay a high price for my high-quality embroideries, but now I refuse to sell them. I prefer to keep and pass them down to the next generation. These old Miao embroideries are witness to the past: where did our Miao come from? Why is the butterfly our ancestor? Who made great contributions to our group? Significant information is documented in these embroideries. I truly think it is my responsibility to keep good embroideries. Selling them means a loss of our history, and the younger generations will know nothing about our Miao history and themselves.

Here we can see clearly that Tianlan has developed the view that Miao embroidery, as a bearer of culture and history, plays an essential role in the construction and preservation of Miao identity. As Anthony Smith reminds us, the essential 'ingredients' required to image a community is "myths, symbols, and memories of ethnic origins" (2009, p. 24). Embroidery provides modern Miao people with tangible material through which they can understand they distinct cultural identity. Whether or not Miao women wear embroidered dress, it remains "an orientation to the past" that evokes individuals' sense of belonging and loyalty to the Miao as a distinct group (Eicher, 1995 p. 301).

However, adhering to 'traditional' Miao styles of embroidery production and consumption is no longer a strict prerequisite to claiming one's Miao identity. Yanzhu, another Miao woman who has run an embroidery gallery in Guiyang since 2003, reflected on this matter pragmatically:

> Some Miao women use modern stitching patterns. I must say I find these patterns weird. They can look beautiful, but not very Miao to me. But I'm not judging these women. They often don't know what truly traditional patterns look like, because we've lost vintage embroideries to the outside world. If we wanted Miao women to express their Miao identity through traditional Miao designs, then it's imperative that we preserve and promote the original patterns as much as possible. The colours, designs and skills reflect previous generations' tastes and efforts, and provide us with models to produce Miao-style embroideries.

It has dawned on many older Miao women, who handed over generations-old embroidery that could be considered as 'design books' from the past, that the initial commodification of Miao embroidery came with great consequences to their culture and its history. The preservation of Miao embroidery—both of surviving items and the skills to produce classic patterns—has become a conscious agenda of women such as Tianlan and Yanzhu. At the same time, Miao women, especially younger generations, are increasingly embracing new and innovative embroidery patterns. A key example is the incorporation of an Olympic Games mascot into an embroidery piece, as discussed in Chapter 7. These women consider both the old and newly created embroidery patterns as proudly Miao, as they are all produced by Miao women, with the use of culturally distinct embroidery techniques.

The presence of both traditionalists and more playful, experimental embroiderers is animating Miao cultural events such as the Sisters (*zimei*) Festival. This is an annual event held in May, with the main function to provide an opportunity for young Miao

women and men to meet each other and choose a marriage partner. Almost every young Miao woman wears the most elaborately embroidered attire to attract the attention of the men. Married women in attendance also wear their best attire to show-off their embroidery skills and aesthetic tastes. As a result, Sisters Festival has become the biggest event showcasing Miao embroidered clothes, which attracts not only outsiders but also large numbers of Miao women from throughout the region.

During the festival, Miao women mainly focus on two things. First, they promote their Miao embroidery businesses and expand their social networks with visiting investors and government officials. Second, they closely observe, appreciate and keenly discuss other Miao women's embroidered garments. Many Miao women can be seen at these events taking out their dusty cameras to snap photographs of other Miao women's outfits on public display. Over time, street stalls have developed a new line of business, selling DVDs with recordings of the festival after its conclusion. When I inquired with one stall owner, he explained that he and six of his part-time assistants from the village shot the videos that they were selling. Although the shooting was amateur and the quality was poor, these recordings were very popular among Miao women in the village. They would watch the videos using portable DVD players, closely scrutinising the embroidered outfits captured within, and enthusiastically discussing their patterns, colours and other aspects (see the photo below).

Photo 9.2. A Miao woman is photographing Miao embroidered attire during the Sister Festival.

Photo by author

This example vividly illustrates how Miao proactively engage with appraisals of embroideries that other women produce, as well as debating which are more attractive, appropriate and innovative. As they discuss, at times light heartedly and at other times more seriously, it is clear that the construction of a modern Miao identity means neither rigidly protecting tradition nor discarding it. Instead, it involves dynamic trial and error processes that incorporate modern ideas into traditional cultural practices, and vice versa.

Importantly, Miao people's high evaluation on their embroidery and the ordinary use of modern techniques is a reflection of their emotional attachment to Miao ethnicity.

One Miao woman told me: “I just like our Miao embroidery for no reason.” In my opinion, “for no reason” precisely indicates her strong emotional attachment to Miao embroidery as a central aspect of Miao identity: a deep-seated connection that will not be swayed by instrumental factors or other’s attitudes. This sentiment underlines the revitalisation of Miao ethnicity, and in turn, are reinforced through a renewed modern Miao identity. Put it in another way, the current revitalisation of Miao ethnicity is not fully occurring due to the practical benefits it brings to Miao people, but because itself an enjoyable and comfortable identity for Miao people.

The contemporary revitalisation of Miao identity has allowed Miao people to openly and freely embrace their ever-shifting traditions in ways that affirm their primordial attachment to their ethnicity. (See Chapter 1 for a detailed discussion about the primordialist and instrumentalist attachments to ethnicity). Although these primordial understandings of ethnicity have been critiqued in the social sciences and would be considered by many to be outdated, in my fieldwork I found such primordial sentiments to be strong among my Miao interlocutors. I would even go so far as to say that they expressed self-essentialising understandings of their ethnic identity

In Butterfly Village, primordialism co-exists with more instrumental understandings of Miao ethnic identity. Villagers in my study selected, emphasised, exploited and even invented essentialised cultural features in their pragmatic pursuit of political advantage and material interests in certain contexts. As I have demonstrated in the previous chapters of this thesis, I find more contemporary approaches to instrumentalism to be more productive, as they focus on the agency of ordinary people, examining the role of

individuals in the production and reproduction of ethnicity in their daily practices (Chattaraman & Lennon, 2008; Baumann, 2004).

In this chapter, I have discussed the ways in which the Miao express and interpret their ethnic identity by means of their embroidery practices in the context of ethnic tourism and the commodification of ethnic culture. The chapter first reviewed the history of the self-alienation of Miao identity before the mid-1980s, especially Miao women's pursuit of 'modern' status through accepting Western-style clothing and incorporating Han characters into their embroidery. Next, I explained Miao women's newly found self-confidence and pride in being Miao, and particularly of their embroidery skills, as well as the revitalisation of Miao identity in the context of the politicisation of clothing in China, the popularity of embroidery in arts and tourist markets, and the reevaluation of the value of ethnic culture among the Han. Finally, I examined Miao women's contemporary embroidery practices, which incorporates modern sentiments and practices into traditional customs, and vice versa.

My main argument within this chapter is that the revitalisation of Miao identity, on the one hand, serves instrumental roles for the Miao in their pragmatic pursuit of economic and political interests. On the other hand, however, it is rooted in their primordial attachments to their group, their embodied learning experience of embroidery, and pleasures they gained from their embroidery activities. My empirical study also resonates with the growth of scholarly publications on synthesising theories of primordialism with instrumentalism for a more comprehensive and multidimensional explanation of ethnicity.

In the concluding chapter, I will review the key points that I addressed in each chapter, and revisit my research questions in light of my findings.

Chapter 10 Conclusion

This thesis has investigated the changing practices of traditional Miao embroidery in the context of China's economic, socio-political and technological transformations since the Reform era of the 1970s. The introduction of the modern capitalist economy, the rise and expansion of ethnic tourism, the development of the export-driven textile industry, and the resulting growth in rural–urban labour migration have all impacted the traditional ethnic craft as practiced by Miao women. In the context of the ongoing marginalisation of the Miao as an ethnic minority in China, their stereotypical image as a 'primitive' and 'exotic' people has taken on new meanings as ethnic crafts have increasingly become commodified for the tourism and collectors' markets. Based on an ethnographic study of Miao villages in Guizhou Province in Southwest China, I examined the impact of the commodification on the embodied craft-making practice, the women who produce and consume new forms of production, their households and the village communities at large. In particular, the thesis attempted to answer the following main research questions:

1. What roles have the emerging Miao embroidery industry and related cultural practices played in Miao communities that were previously dominated by agrarian-based economies?

2. What are the main factors that have stimulated the emergence and development of the commercial Miao embroidery industry, in the context of China's economic reforms, ethnic tourism, and ethnic policies?

3. How has Miao women's engagement in the production and commercialisation

of embroidery contributed to existing social inequalities, or reconfigured the gender relations in the household, the village and the broader Miao ethnic identity at large?

4. How have the Miao diversified their understandings, aspirations and practices of Miao culture in an attempt to assert their cultural sovereignty, given the diversity of actors and institutions involved in Miao embroidery marketplaces?

This thesis has focused on the tension between Miao women's individual agency and the structure through which ethnic culture is commercialised, reproduced and revitalised. My main argument has been that the commodification of Miao embroidery in the market economy in post-socialist China did not weaken the traditional ethnic practice, but instead, it has revitalised it. The commodification of ethnic crafts has created new economic and social opportunities for Miao women, which served some women better than others. The introduction of a new economy has shifted the gendered division of labour at home as well as in the tourism market economy, which has reconfigured the gender relations in households as well as village communities. The engagement of Miao women in entrepreneurial activities to produce embroidery 'products' as well as in new forms of consumption of embroidered clothing has changed Miao communities, in the process providing a new means to assert a newly self-confident ethnic Miao identity regionally, nationally and internationally.

In Chapter 1, I reviewed the existing anthropological literature on ethnic crafts and ethnic minority identity formations through crafts, and the impact of the commodification in the context of rising ethnic tourism. I also reviewed the literature

on women's empowerment in ethnic tourism economies and explained the concept of agency used in this thesis.

In Chapter 2, I explained the research methods used. Between August 2012 and September 2013, I conducted fieldwork for 13 months in rural villages in Qiandongnan Miao and Dong Autonomous Prefecture, Guizhou Province in South-east China. I also took a one-month return trip between May and June in 2016. During the fieldwork, I conducted open-ended interviews with Miao women and men, art collectors and merchants, government officials and tourists, as well as conducting participant observation at museums, ethnic craft markets, Miao festivals, weddings, and other Miao embroidery-related events such as craft competitions. Desktop research was used throughout the project to analyse key policies and other documents to supplement the data I collected from fieldwork. In addition, I worked as an apprentice alongside a Miao master embroiderer in my field site. Apprenticeships are an anthropological method suitable for not only gaining access to local communities but also learning embodied cultural practices through an acquisition of skills.

In Chapter 3, I provided background information relevant to the field site. This included: the history of the Miao as an ethnic group and a review of how the state designation of the Miao as an ethnic minority in China has affected them; the rise of rural-to-urban labour migration since the opening up of the national economy to foreign investments; and the emergence of ethnic tourism in China and especially in Guizhou Province. This was to situate the commodification of Miao embroidery in its historical, social, cultural and economic contexts. The deliberate government policies to promote ethnic tourism

as a way of modernising the economy targeted Guizhou and the Miao as its prominent ethnic minority group. The new economic opportunities that emerged provided Miao women with new ways to access power in the form of cash incomes, entrepreneurships and access to legitimate reasons to expand their presence into the public sphere.

Chapter 4 explained Miao embroidery as a traditional ethnic practice before the advent of ethnic tourism, and the social and cultural functions it served, such as expressing ethnic group membership and other group identities, visually recording history and knowledge, and the maintenance of gender roles. I argued that embroidery traditionally disciplined as well as empowered Miao women: it was a means to demand compliance to gendered social and cultural expectations, but also helped create a community among women in which they learned not only craft skills but also how to be the bearers of cultural tradition and ethnic identity. The women also formed friendships that were independent of their relationships to men in the village.

In Chapter 5, I discussed the early stage of the commodification of embroidery for ethnic tourism during the 1980s and 1990s. I analysed how women played a key role in the development of the new tourism-driven economy as producers as well as promoters of their embroideries. The tension that emerged within the village in the face of the commercialisation of ethnic cultural practices was both caused by, and shaped the relationships with the Chinese government, collectors of ethnic arts and crafts, and domestic and foreign tourists. The relationships among Miao women themselves also changed, as they came to occupy unequal positions in the shifting village hierarchy. Those with pre-existing economic, social and other forms of capital could further

increase their wealth and status by becoming traders of vintage embroideries, while others who had fewer resources to draw on had come to rely on selling their inherited embroideries to Miao trader women to earn cash. That is, within the community of women as producers of embroidery, opportunities to accumulate capital were unequally distributed. The First-Generation Buyers used the first mover advantage to control supply chains and distribution channels to create lucrative businesses selling vintage embroideries and accumulating personal wealth. The Second-Generation Buyers established their own networks and set up stalls at antique and craft markets to sell not only embroideries but also other textile products. But their incomes were highly unstable, and many businesses failed to flourish. Other Miao women entered the trade as small-time suppliers whose geographical disadvantage and lack of social capital meant they were ignorant of embroidery as an enterprise. As a result, the three groups of Miao entrepreneurs had unequal power to negotiate prices.

It was also in Chapter 5 that I interpreted the commercial success of embroidery businesses in Butterfly Village through a comparative lens, by investigating the limited commodification of Miao embroidery in Red and Silver villages. My analysis revealed that factors such as government policy priorities, geographical locations and aesthetic qualities of embroidery all played a significant role in the extent to which Miao embroidery became commodified and valorised in tourism markets.

The more recent period of the commercial development of embroidery in Butterfly Village was investigated in Chapter 6, with focus on the years since the 2000s, during which ethnic tourism in the village was fully developed and demand for Miao

embroideries had skyrocketed. This occurred as the collective stock of vintage embroideries dwindled due to rampant trades and other economic activities, resulting in a loss of embroidery arts and crafts to wealthy buyers abroad. I examined how Miao women have since actively produced new embroideries by establishing production and distribution networks of their own. The availability of machine-made embroideries changed the existing distribution and production methods and made it possible to sell smaller and cheaper machine-embroidered products to tourists as alternatives to expensive vintage embroideries. It also encouraged Miao women to become consumers of embroideries they did not produce. Miao women vendors of embroideries adopted durable machine-embroidered dresses as their 'costume' during sales activities so as not to spoil the increasingly rare vintage dresses they inherited. Young Miao women who lived in cities as time-poor migrant workers also made do with purchased machine-embroidered dresses when they returned to their village to participate in community events. The introduction of machine-embroidery technics also opened up entrepreneurial potential for Miao men to participate in the embroidery trade for the first time. This was especially true when they teamed up with Miao women (usually their wives) as business partners.

Chapter 7 further considered the changing gender relations in Butterfly Village, at both the household and the village levels. At the household level, the commodification of embroidery impacted the gendered division of labour as well as the notion of paid work. Miao women's entry into the embroidery economy gave them more cash than they were previously able to earn, and the frequent trips to craft markets and public relations events, among other events, also made them more geographically mobile. Their husbands were often forced to renegotiate their role as a provider. Some valued the

economic opportunity and accepted a new responsibility for reproductive and domestic labour at home, while others refused to cooperate and asked their wives to balance paid work and unpaid care labour. Miao women's commercial embroidery practice also promoted a shift in an understanding of gender ideals at the village level. The traditional valorisation of skilled embroiderers as 'good Miao women' gave way to the new concept that good Miao women are also successful entrepreneurs. I argued that Miao women exercised their agency by pursuing economic and social autonomy in ways that were intrinsically linked to the pursuit of the cultural autonomy of the Miao as an ethnic group.

Chapter 8 analysed how the concept of authentic Miao embroidery changed over time. As already discussed, the commodification of Miao embroidery had wide-reaching impacts on not only individuals' economic opportunities but also the ways in which households were organised, as well as the social and cultural norms in Butterfly Village. My findings indicate that these changing economic, social and cultural environments reworked the concept of authenticity associated with Miao embroidery. The ways in which Miao women variously included certain forms of embroideries in their definition of Miao crafts while excluding others exemplifies the dynamic nature of the concept of authenticity of ethnic crafts. At the core of the flexible and contextual interpretation of what is authentically Miao was the understanding that Miao authenticity resides in the embodied cultural practices of Miao women, however they are practiced at any given time. Far from being passive carriers of 'tradition', the women were active agents who explained and justified various choices they made, and creatively shaped modern Miao identity.

In Chapter 9, I examined the impact of the commodification of Miao embroidery on how Miao women interpret and express their ethnic identity. Miao women began re-evaluating their previously marginalised ethnic identity as their embroidery culture enjoyed a high profile nationally and internationally. I have argued that Miao women's engagement with the commodification of embroidery has been a foremost force in the revitalisation of Miao ethnic identity. The women actively incorporated modern sentiments and practices into traditional ethnic customs, and vice versa. This revitalisation was partly about a pragmatic pursuit of economic and political influence, but it was also part of the women's continued attachment to the tradition of embroidery, whose embodied maintenance brought them many pleasures and pride.

The commodification of Miao embroidery in Butterfly village is a phenomenon that has wide-ranging implications beyond the Miao an ethnic group or Guizhou province. It helps us contemplate the connection between the marketisation of ethnic art and craft and the exoticisation of ethnic culture, and its relation to the reconfiguration of gender and other dynamic power relations.

Specifically, the thesis has challenged a common assumption that the commercial development of ethnic culture promotes its protection. In 2003, UNESCO issued a new international treaty called the Convention for the Safeguarding of the Intangible Culture Heritage. This treaty aims to help local cultural traditions—including oral traditions, festive events, traditional craftsmanship, and other local cultural practices—survive and flourish in the face of globalisation and its perceived homogenising effects on culture (Kurin, 2004; Matsuura, 2004). In recent years, both Chinese government and scholars

have also affirmed the positive impact of tourism and ethnic arts markets on the protection of ethnic handicrafts (Blumenfield & Silverman, 2013; Nyiri, 2006). Main methods of safeguarding against the erosion of ethnic cultural practices are offering financial incentives to craftsmen and creating new markets for craft products (Stefano, Davis & Corsane, 2014). In the dominant Chinese official and academic discourse, this is called 'productive protection' (*shengchanxing baohu*). In the Chinese Government White Papers published in 2010, the criteria of productive protection are defined as follows: "to generate economic returns from the circulation of intangible cultural heritage, has achieved fundamental progress [on protecting traditional craftsmanship], contributing positively to the coordinated development of economy and society". According to this definition, the commodification of Miao embroidery in Butterfly village is a success example of the productive protection of a Miao ethnic tradition. It has increased employment opportunities, relieved rural poverty and motivated young Miao women to learn embroidery skills. Importantly, it has maintained Miao embroidery as a lively daily practice through increased production, distribution and consumption.

However, as discussed in previous chapter, the development of ethnic tourism has also reproduced a widespread stereotype of 55 ethnic groups in China as exotic, feminine and 'backward' (Gladney, 1994; Diamond, 1998). This stereotype is promoted to both domestic and foreign tourists to satisfy their romanticised image of the 'primitive Other' (Stasch, 2014). Driven by economic interests, Miao women are often pressured to enact the stereotypical 'tribal' and 'exotic' aesthetics of their Miao embroidery in a manner that homogenises their culture. The commercial success of embroidery in Butterfly village has meant that generations of Miao women have engaged in such a

representation of their ethnic culture in relation to the tourism industry.

Given this, the question is at what cost and in what ways ethnic cultures are ‘protected’, and the consequences of policy interventions on the very cultures they are designed to support. The uneven commercial development of Miao embroidery in three villages shown in Chapter 5 reveals that only specific Miao embroidery styles have become the targets of ‘productive protection’. This promotes regional economic development and the revitalisation of Miao culture, but may also lead to the homogenisation of Miao embroidery. As I have shown, for the Miao in Butterfly Village, the commodification of embroidery helped transform their expression of ethnic identity, the passing on of cultural inheritance and the maintenance of their collective memory and the village economy. But at the same time, their production of creative and exquisite artwork has, to an extent, been replaced by that of souvenir ‘products’, and the commercial logic does not encourage the development of new and time-consuming designs, styles and production skills. Second, for the Miao sub-groups who experienced the failed commodification of their embroidery, many group members migrated to cities to find jobs, which depopulated the village. This may lead to a decline of these sub-groups’ embroidery cultural practice. My findings highlight some (unintended) consequences of the ethnic cultural heritage protection policies in China, and the mixed results they bring to ethnic villages.

Moreover, this study calls attention to the power relations underpinning the efforts to develop and protect ethnic crafts as a cultural heritage and a commercial industry. Miao villagers, government bureaucrats, collectors, tourism operators and tourists have all

been active agents in defining and representing Miao embroidery. In this process, new norms and standards regarding what is 'good Miao embroidery' have been shaped and promoted. My analysis has shown how the commercial development of ethnic crafts may become a tool of various agents in constructing "identity, experiences, and social standings". (Smith, 2006, p. 52). In line with other recent studies (Oakes, 2016; Diekmann & Smith, 2015; Chio, 2014; Yang & Wall, 2008), my thesis has sought to present the voices of ethnic groups and view them as agents rather than exotic 'performers' of ethnic identity for tourist consumption. Based on my analysis, I argue that the instances of Miao women's self-exoticisation should be not viewed as the simple compliance with, or the mere internalization of Orientalism (Schein, 1997), but interpreted as both a conscious strategy to gain economic benefits as well as a reflexive process of attaining a higher social and cultural status as an ethnic monirity. Most importantly, self-representing Miao culture is not only a' job' to earn a living, but a platform on which Miao women redefine their gendered ethnic identity. The reflexive practice of identity development and performance increases their cultural pride and heightens the sense of their self-worth. Their decision to determine which aspects of Miao culture to present, when and how is both based on their shifting understanding of their culture, as well as through interactions with both insiders and outsiders, as well as national, regional and international discourses and ideas regarding ethnicity, modernity and culture. Far from being passive carriers of the exotic and timeless 'tradition', Miao women are active agents who interpret, explain and justify various choices they made, and creatively shape gendered modern Miao identity.

This thesis has examined ethnic women's empowerment under the economic transition from the dominance of agriculture to a reliance on wage labour, remittances and tourism

in China's rural regions. My study is allied to and contributes to the recent research on Chinese rural women and rural gender relations which has examined rural women's complex and context-dependent agency and empowerment (Jacka, 2014; Chio, 2011; Gaetane & Jacka, 2004; Bossen, 2002; China, 2000). Thanks to the Miao embroidery industry, Miao women on the whole have gained greater economic autonomy and decision-making power. However, they are still largely expected to be the primary care-givers and undertake traditional 'women's work' at home. As shown in Chapter 7, working outside the village or operating an embroidery business burdened Miao women with additional workload to the domestic chores and childcare. I have argued that women's new economic role as entrepreneurs in the public sphere did not thoroughly challenge men's superiority.

This thesis has examined the dynamic practices of the Miao as an ethnic minority and their participation in China's state-sponsored ethnic tourism. The commodification of Miao embroidery in Guizhou province and its sociocultural, economic and political impacts are context specific and do not explain ethnic craft production, distribution and consumption in other ethnic regions. As a way of concluding this thesis, I would like to suggest several potential directions for future research to study the interrelations among cultural production, gendered ethnic identity and regional economic development.

First, the interaction between ethnic identity formation and ethnic craft-making is worthy of attention. 'Ethnic crafts' have become a 'brand' for the 55 officially recognised ethnic groups in China. How these groups self-conscious brand their ethnic identity through the production and sales of crafts in China's maturing tourism market

would be fruitful to examine comparatively. My study has depicted a successful example of the transformation of ethnic traditions as they contributed to the modernisation of China, regional economic growth, and the revival of an ethnic culture. However, there are ethnic groups whose artefacts, performances, and other traditional cultural expressions remain neglected by the government and the tourism market. This is particularly the case for those ethnic minorities who are yet to be officially recognised nationally. They have fewer opportunities to integrate their ethnic resources into the market to improve their peripheral status. It would be useful to research their engagement in state-sponsored ethnic tourism, and perhaps compare ethnic regions with different levels of economic development. Such studies would reveal multifaceted, fluid and complex processes of the development of ethnic tourism and regional economies.

Second, it would be fruitful to focus on the ways in which cultural entrepreneurs from different ethnic backgrounds collaborate or compete with each other as they promote a particular ethnic craft. In particular, the expanding involvement of Han individuals in China's ethnic craft industry and their impact in the present is worth investigating. How does their participation in an ethnic craft market affect ethnic minorities' expressions of their identity?

Lastly, future projects should continue the focus on ethnic women's political participation and leadership with regards to regional and even national economic development. My study emphasised Miao women's exercise of agency and the economic, political and cultural roles they played in the village and beyond. Future

studies that explore the intersection between women's ethnic practices and the politics of ethnic culture and identity (re)formation in the era of social media would certainly be fruitful.

References

Abrahams, R. (2015). Tourism and the reconfiguration of host group identities: a case study of ethnic tourism in rural Guangxi, China. *Journal of Tourism and Cultural Change, 13*(1), 39-55.

Abu-Lughod, L. (1990). The romance of resistance: Tracing transformations of power through Bedouin women. *American Ethnologist, 17*(1), 41-55.

Acharya, J., & Lund, R. (2002). Gendered spaces-socio-spatial relations of self-employed women in craft production, Orissa, India. *Norsk Geografisk Tidsskrift, 56*(3), 207-218.

Adams, K. M. (1997). Ethnic tourism and the renegotiation of tradition in Tana Toraja (Sulawesi, Indonesia). *Ethnology,* 309-320.

Adorno, T., & Horkheimer, M. (1977). The culture industry: Enlightenment as mass deception. In J. Curran, M. Gurevitch, & J. Woollacott (Eds.), *Mass Communication and Society* (pp.349-384). London: Edward Arnold.

Afridi, F., Li, S. X., & Ren, Y. (2015). Social identity and inequality: The impact of China's hukou system. *Journal of Public Economics, 123*, 17-29.

Ahearn, L.M. (1999). Agency. *Journal of Linguistic Anthropology, 9*(1/2), 12-15.

Ahearn, L.M. (2001a). Language and agency. *Annual Review of Anthropology, 30*(1), 109-137.

Ahearn, L.M. (2001b). *Invitations to love: Literacy, love letters, and social change in Nepal*. Ann Arbou: University of Michigan Press.

Ahl, H. (2006). Why research on women entrepreneurs needs new directions. *Entrepreneurship Theory and Practice, 30*(5), 595-621.

Aibida. (1992). *Qiannan shilue [A handbook of Guizhou].* Guiyang: Guizhou Nationalities Publishing House. (original work published 1750)

Airey, D., & Chong, K. (2010). National policy-makers for tourism in China. *Annals of Tourism Research, 37*(2), 295-314.

Akama, J.S., & Kieti, D. (2007). Tourism and socio-economic development in developing countries: A case study of Mombasa Resort in Kenya. *Journal of Sustainable Tourism, 15*(6), 735-748.

Anderson, L.F., & Littrell, M.A. (1995). Souvenir-purchase behavior of women tourists. *Annals of Tourism Research, 22*(2), 328-348.

Anderson, R. L. (1989). *Art in Small-Scale Societies*. Englewood Cliffs, NJ: Prentice Hall.

Angé, O., & Berliner, D. (2016). *Anthropology and nostalgia*. New York: Berghahn.

Angrosino, M. V. (2005). Recontextualizing observation: Ethnography, pedagogy, and the prospects for a progressive political agenda. In N. K. Denzin & Y. S. Lincoln (Eds.), *The Sage handbook of qualitative research* (pp. 729-745). London: Sage.

Aoki, T. (2002). *The role of cultural tourism for sustainable development: The case of music in Cuba* (PhD dissertation). Halifax, Nova Scotia: Dalhousie University.

Appadurai, A. (1988). Introduction: Commodities and the politics of value. In A. Appadurai (Ed.), *The social life of things: Commodities in cultural perspective* (pp. 3-63). Cambridge: Cambridge University Press.

Aref, F., & Ma'rof, R. (2009). Community leaders' characteristics and their effort in building community capacity for tourism development in local communities. *International journal of business and management, 4*(10), 187-193.

Ashworth, G.J. (2009). Do tourists destroy the heritage they have come to experience? *Tourism Recreation Research, 34*(1), 79-83.

Aspelund, K. (2011). *Who controls culture?: Power, craft and gender in the creation of Icelandic women's national dress* (PhD dissertation). Boston: Boston University.

Athukorala, P.C., & Wei, Z. (2018). Economic transition and labour market dynamics in China: An interpretative survey of the 'turning point'debate. *Journal of Economic Surveys, 32*(2), 420-439.

Atkinson, P.A., & Coffey, A. (1997). Analysing documentary realities. In D. Silverman (Ed.), *Qualitative research: Theory, method and practice* (pp. 45-62). London: Sage.

Bakas, F.E. (2014*). Tourism, female entrepreneurs and gender: Crafting economic realities in rural Greece* (PhD dissertation). New Zealand, Otago: University of Otago.

Bankston, C.L., III, & Jacques, H. (2000). Spectacles of ethnicity: Festivals and the commodification of ethnic culture among Louisiana Cajuns. *Sociological Spectrum, 20*(4), 377-407.

Bao, J., & Sun, J. (2007). Differences in community participation in tourism development between China and the West. *Chinese Sociology & Anthropology, 39*(3), 9-27.

Baranovitch, N. (2010). Others no more: The changing representation of non-Han peoples in Chinese history textbooks, 1951-2003. *The Journal of Asian Studies, 69*(1), 85-122.

Basu, A.M., & Koolwal, G.B. (2005). Two concepts of female empowerment-some leads from DHS data on women's status and reproductive health. In S. Kishor (Ed.) *A focus on gender: Collected papers on gender using DHS data* (pp. 15-33). Calverton (Maryland): ORC Macro.

Baumann, T. (2004). Defining ethnicity. *The SAA Archaeological Record, 4*(4), 12-14.

Beaudry, M.C. (2007). *Findings: The material culture of needlework and sewing*. New Haven, CT: Yale University Press.

Bendix, R. (2009). *In search of authenticity: The formation of folklore studies*. Madison, WI: University of Wisconsin Press.

Benson, J.E. (1983). Politics and Muslim ethnicity in South India. *Journal of Anthropological Research, 39*(1), 42-59.

Berger, A.A. (2004). *Deconstructing travel: Cultural perspectives on tourism*. Walnut Creek, CA: Altamira Press.

Berman, R.A. (1989). *Modern culture and Critical Theory: Art, politics, and the legacy of the Frankfurt School*. Madison: The University of Wisconsin Press.

Bernard, H.R. (2017). *Research methods in anthropology: Qualitative and quantitative approaches*. New York: Rowman & Littlefield.

Bianchi, R.V. (2003). Place and power in tourism development: Tracing the complex articulations of community and locality. *Pasos, 1*(1), 13-32.

Bianchi, R.V. (2009). The 'critical turn'in tourism studies: A radical critique. *Tourism Geographies, 11*(4), 484-504.

Bittman, M., & Wajcman, J. (2000). The rush hour: The character of leisure time and gender equity. *Social Forces, 79*(1), 165.

Blum, S.D. (2001). *Portraits of "primitives": Ordering human kinds in the Chinese nation*. Lanham: Rowman & Littlefield Publ.

Blumenfield, T., & Silverman, H. (2013). *Cultural heritage politics in China*. New York, NY: Springer New York.

Boas, F. (1955). *Primitive art*. New York: Dover.

Bodolec, C. (2013). The Chinese paper-cut: From local inventories to the UNESCO representative list of the intangible cultural heritage of humanity. In R. Bendix (Ed.), *Heritage regimes and the state* (pp. 249-264). Göttingen: Göttingen University-Verl.

Bonnin, C. (2011). *Markets in the mountains: Upland trade-scapes, trader livelihoods, and state development agendas in Northern Vietnam* (PhD dissertation). Canada, Quebec: McGill University.

Bonnin, C. (2018). Ethnic minority traders and the refashioning of cultural commodities in the Sino-Vietnamese border uplands. In H. Alexander, M. Saxer (Eds.),*Routledge Handbook of Asian Borderlands* (pp. 325-33). Abingdon: Routledge.

Borchert, T. (2005). Of temples and tourists: the effects of the tourist political economy on a minority Buddhist community in Southwest China. In F. Yang & J. B. Tamney (eds.). *State, Market, and Religious in Chinese Societies*. (pp. 87-112). Leiden: Koninklike Brill NV.

Bossen, L. (1984). *The redivision of labor: Women and economic choice in four Guatemalan communities*. Albany: State University of New York Press.

Bossen, L. (2002). *Chinese women and rural development: sixty years of change in Lu Village, Yunnan*. Lanham: Rowman & Littlefield Publishers Inc.

Bourgois, P. (2006). *Engaged observer: anthropology, advocacy, and activism*. New Brunswick: Rutgers University Press.

Braden, S., & Mayo, M. (1999). Culture, community development and representaion. *Community Development Journal, 34*(3), 191-204.

Bradshaw, S. (1995). Female-headed households in Honduras: Perspectives on rural-urban differences. *Third World Planning Review, 17*(2), 117.

Brass, P.R. (2000). Elite groups, symbol manipulation and ethnic identity among the Muslims of South Asia. In J. Hutchinson & A.D. Smith (Eds.), *Nationalism: Critical concepts in political science* (Vol. 3, pp. 879-911). London: Routledge.

Bray, F. (1997). *Technology and gender: Fabrics of power in late imperial China.* Oakland, CA: University of California Press.

Brayboy, B. M., & Deyhle, D. (2000). Insider-outsider: researchers in American Indian communities. *Theory into practice, 39*(3), 163-169.

Brian, S. (1986). Weavers and dealers: The authenticity of an oriental carpet. In A. Appadurai (Ed.), *The social life of things: Commodities in cultural perspective* (pp. 95-235). Cambridge: Cambridge University Press.

Brown, M. F. (2005). Heritage trouble: Recent work on the protection of intangible cultural property. *International Journal of Cultural Property, 12*(1), 40-61.

Bryant, L., & Pini, B. (2011). *Gender and rurality*. New York: Routledge.

Bulag, U.E. (2010). Wearing ethnic identity: Power of dress. In J.B. Eicher (Ed.), *Berg encyclopedia of world dress and fashion Vol 6*. Oxford: Berg Publishers.

Bun, C.K., & Kiong, T.C. (1993). Rethinking assimilation and ethnicity: The Chinese in Thailand. *International Migration Review, 27*(1), 140-168.

Bunten, A. (2008). Sharing culture or selling out? Developing the commodified persona in the heritage industry. *American Ethnologist, 35*(3), 380-395.

Busch, P. (2008). *Tacit knowledge in organizational learning*. Hershey, PA: IGI Global.

Bush, D. (1978). Thorstein Veblen's economic aesthetic. *Leonardo, 11*(4), 281-285.

Cai, F., & Wang, M. (2008). A counterfactual analysis on unlimited surplus labor in rural China. *China & World Economy, 16*(1), 51-65.

Cant, A. (2015). The allure of art and intellectual property: Artisans and industrial replicas in Mexican cultural economies. *Journal of the Royal Anthropological Institute, 21*(4), 820-837.

Carrico, K. (2017). *The great Han: Race, nationalism, and tradition in China today*. Oakland, CA: University of California Press.

Castells, M. (2006). Globalisation and identity: A comparative perspective. *Journal of Contemporary Culture,* (1), 56-67.

Causey, A. (2003). Hard bargaining in Sumatra: Western travelers and Toba Bataks in the marketplace of souvenirs. Honolulu: University of Hawaii Press.

Cave, J., & Jolliffe, L. (Eds.). (2013). Tourism and souvenirs: Glocal perspectives from the margins. Buffalo, NY: Channel View Publications.

Chan, K.W., & Zhang, L. (1999). The hukou system and rural-urban migration in China: Processes and changes. *The China Quarterly, 160*, 818-855.

Chang, H., Dong, X.Y., & MacPhail, F. (2011). Labor migration and time use patterns of the left-behind children and elderly in rural China. *World Development, 39*(12), 2199-2210.

Chang, T.C. (1999). Local uniqueness in the global village: Heritage tourism in Singapore. *The Professional Geographer, 51*(1), 91-103.

Chant, S. (2000). Men in crisis? Reflections on masculinities, work and family in north-west Costa Rica. *The European Journal of Development Research, 12*(2), 199-218.

Chattaraman, V., & Lennon, S.J. (2008). Ethnic identity, consumption of cultural apparel, and self-perceptions of ethnic consumers. *Journal of Fashion Marketing and Management, 12*(4), 518-531.

Cheater, A. (1999). *The anthropology of power*. London: Routledge.

Chen, C., Chang, L., & Zhang, Y. (1995). The role of foreign direct investment in China's post-1978 economic development. *World Development, 23*(4), 691-703.

Chen, G. T. (2010). *Duo xi wawa Miaozu fushi tulu* [Miniatures of Miao beauty and brilliance]. Taiwan: Fu Jen Catholic University Press.

Chen, H. (2017). *The institutional transition of China's township and village enterprises: Market liberalization, contractual form innovation and privatization*. Abingdon: Routledge.

Chen, J. (2006). Development of Chinese small and medium-sized enterprises. *Journal of Small Business and Enterprise Development, 13*(2), 140-147.

Chen, P. (2006). Guizhou he Yunnan lüyou fazhan shuiping bijiao [Comparision of the tourism development levels between Guizhou Province and Yunnan Province]. *Journal of Guizhou University of Technology (Social Science Edition), 8*(6), 60-63.

Cheung, S.W. (2012). Appropriating otherness and the contention of Miao identity in Southwest China. *The Asia Pacific Journal of Anthropology, 13*(2), 142-169.

Chhabra, D. (2005). Defining authenticity and its determinants: Toward an authenticity flow model. *Journal of Travel Research, 44*(1), 64-73.

Chhabra, D. (2012). Authenticity of the objectively authentic. *Annals of Tourism Research, 39*(1), 499-502.

Chibnik, M. (2003). *Crafting tradition: The making and marketing of Oaxacan wood carvings*. Austin: University of Texas Press.

Chien, M. (2016) An inter-subjective ethnography: Cloth and married women among Hmub villages in eastern Guizhou. *Journal of Guangxi University for Nationalities (Philosopy and Social Science Edition), 38*(4), 27-38.

China, G. I. (2000). *Re-drawing boundaries: work, households, and gender in China (Vol. 25)*. Berkeley: University of California Press.

Chio, J. (2011). Leave the fields without leaving the countryside: Modernity and mobility in rural, ethnic China. *Identities, 18*(6), 551-575.

Chio, J. (2014). *A landscape of travel: The work of tourism in rural ethnic China*. Seattle: University of Washington Press.

Chow, C. (2005). Cultural diversity and tourism development in Yunnan Province, China. *Geography, 90*(3), 294-303.

Chutia, L.J., & Sarma, M.K. (2016). Commercialization of traditional crafts of South and South East Asia: A conceptual model based on review of literature. *IIM Kozhikode Society & Management Review, 5*(2), 107-119.

Clifford, J. (1988). *The predicament of culture: Twentieth-Century Ethnography, literature, and art*. Cambridge, MA: Harvard University Press.

Clifford, J. (2004). Looking several ways: Anthropology and native heritage in Alaska. *Current Anthropology, 45*(1), 5-30.

Clifford, J., & Marcus, G.E. (Eds.). (1986). *Writing culture: The poetics and politics of ethnography*. Berkeley, CA: University of California Press.

Cohen, C.B. (1995). Marketing paradise, making nation. *Annals of Tourism Research, 22*(2), 404-421.

Cohen, E. (1979). Rethinking the sociology of tourism. *Annals of Tourism Research, 6*(1), 18-35.

Cohen, E. (1993a). Investigating tourist arts. *Annals of Tourism Research, 20*(1), 1-8.

Cohen, E. (1993b). The heterogeneization of a tourist art. *Annals of Tourism Research, 20*(1), 138-163.

Cohen, E. (1995). Contemporary tourism-trends and challenges: Sustainable authenticity or contrived post-modernity? In R. Butler & D.G. Pearce (Eds.), *Change in tourism: people, places, processes* (pp. 12-29). London: Routledge.

Cohen, E. (2000). *The commercialized crafts of Thailand: Hill tribes and lowland villages: Collected articles*. Honolulu: University of Hawaii Press.

Cohen, E. (2004). Components and symbols of ethnic identity: A case study in informal education and identity formation in diaspora. *Applied Psychology, 53*(1), 87-112.

Cohen, J.H. (1998). Craft production and the challenge of the global market: An artisans' cooperative in Oaxaca, Mexico. *Human Organization, 57*(1), 74-82.

Cohen, J.H. (2001). Textile, tourism and community development. *Annals of Tourism Research, 28*(2), 378-398.

Cohen, S. (2010). Searching for escape, authenticity and identity: Experiences of 'lifestyle travellers'. In M. Morgan, P. Lugosi & J.R.B Ritchie (Eds.), *The tourism and leisure experience: Consumer and managerial perspectives* (pp. 27-42). Bristol:Channel View Publications.

Cole, S. (2006a). Cultural tourism, community participation and empowerment. In M.K. Smith (Ed.), *Cultural tourism in a changing world: Politics, participation and (re) presentation* (pp. 89-103). Clevedon, UK: Channel View Publications.

Cole, S. (2006b). Information and empowerment: The keys to achieving sustainable tourism. *Journal of Sustainable Tourism, 14*(6), 629-644.

Cole, S. (2007). Beyond authenticity and commodification. *Annals of Tourism Research, 34*(4), 943-960.

Colin, F.L. (2013). Commodification of indigenous crafts and reconfiguration of gender identities among the Emberá of eastern Panama. *Gender, Place & Culture, 20*(4), 487-509.

Comaroff, J., & Comaroff, J.L. (1992). Ethnography and the historical imagnation: Studies in the ethnographic imagination. Boulder, Boulder, CO: Westview Press

Comaroff, J.L., & Comaroff, J. (2009). *Ethnicity, Inc*. Chicago: University of Chicago Press

Communist Party of China of the People's Republic of China. (2001). *The tenth five-year plan for national economic and social development of the People's Republic China.* Retrieved from http://www.people.com.cn/GB/shizheng/16/20010318/419582.html

Communist Party of China of the People's Republic of China. (2008). *The Eleventh Five-Year Plan for Ethnic Minority Affairs*. Retrieved from http://www.gov.cn/zhengce/content/2008-03/28/content_6698.htm

Cone, C.A. (1995). Crafting selves: The lives of two Mayan women. *Annals of Tourism Research, 22*(2), 314-327.

Conklin, B. A., & Nash, J. C. (eds.), (2013). *Anthropology and the Politics of Representation*. University of Alabama Press.

Cook, S. (1984). *Peasant capitalist Industry: Piecework and enterprise in southern Mexican brickyards.*Lanham, MD: University Press of America.

Cook, S. (1993). Craft commodity production, market diversity, and differential rewards in Mexican capitalism today. In J. C. Nash (Ed.), *Crafts in the world market: The impact of global exchange on Middle American artisans* (pp. 59-84). Albany, NY: State University of New York Press.

Cook, S., & Binford, L. (1990). *Obliging need: RURAL Petty industry in mexican capitalism*. Austin, TX: University of Texas Press.

Cook, S., & Dong, X.Y. (2011). Harsh choices: Chinese women's paid work and unpaid care responsibilities under economic reform. *Development and Change, 42*(4), 947-965.

Cooper, E. (1989). Apprenticeship as field method: Lessons from Hong Kong. In M.W. Coy, (Ed.), *Apprenticeship: From theory to method and back again* (pp. 137-148). SUNY Press.

Cooper, F. (1994). Conflict and connection: Rethinking colonial African history. *The American Historical Review, 99*(5), 1516-1545.

Coote, J. (1992). *Anthropology, art, and aesthetics*. Oxford: Clarendon Press.

Cornet, C. (2010). Fieldwork among the Dong national minority in Guizhou, China: Practicalities, obstacles and challenges. *Asia Pacific Viewpoint, 51*(2), 135-147.

Cornet, C. (2015). Tourism development and resistance in China. *Annals of Tourism Research, 52*, 29-43.

Cornet, J. (1975). African art and authenticity. *African Arts, 9*(1), 52-55.

Corrigan, G. (2001). *Miao textiles from China*. London: British Museum.

Costin, C.L. (1998). Introduction: craft and social identity. *Archeological Papers of the American Anthropological Association, 8*(1), 3-16.

Coy, M.W. (Ed.). (1989). *Apprenticeship: From theory to method and back again*. New York: SUNY Press.

Croes, R., Lee, S.H., & Olson, E. D. (2013). Authenticity in tourism in small island destinations: A local perspective. *Journal of Tourism and Cultural Change, 11*(1-2), 1-20.

Crossley, N. (2004). Body and soul: Notebooks of an apprentice boxer. *The Sociological Review, 52*(4), 604-06.

Crossley, P.K. (2007). *A translucent MIRROR: History and identity in Qing imperial ideology*. Berkeley: University of California Press.

Crossley, P., Siu,H. Siu., & Sutton, D. S. (2006). *Empire at the margins: Culture, ethnicity, and frontier in early modern China*. Oakland: University of California Press.

Cumming, E., & Kaplan, W. (1991). *The arts and crafts movement*. London: Thames et Hudson.

Cunliffe, A. L., & Karunanayake, G. (2013). Working within hyphen-spaces in ethnographic research: Implications for research identities and practice. *Organizational Research Methods, 16*(3), 364-392.

Dalidowicz, M. (2012). *Learning Kathak: Crafting bodies and selves in the Guru-Shishya Parampara* (PhD dissertation). Sydney, Australia: Macquarie University.

Danto, A.C. (1981). *The transfiguration of the commonplace: A philosophy of art*. Cambridge (Mass.): Harvard University Press.

Danto, A.C. (1989). *Art/artifact: African art in anthropology collections*. New York: Prestel Publishing.

Davenport, W.H. (2005). *Santa Cruz Island figure sculpture: And its social and ritual contexts*. Philadelphia: University of Pennsylvania museum of archaeology and anthropology.

Davies, A. (2011). Local leadership and rural renewal through festival fun: The case of SnowFest. In Gibson, C., & Connell, J. (Eds.), *Festival Places: Revitalising Rural Australia* (pp. 61-73). Bristol: Channel View Publications.

De Azeredo Grünewald, R. (2002). Tourism and cultural revival. *Annals of Tourism Research, 29*(4), 1004-1021.

De Munck, V.C. (1998). Participant observation. In V.C. De Munck & E.J. Sobo (Eds.). *Using methods in the field: A practical introduction and casebook* (pp. 39-56). Lanham, Maryland : Altamira Press.

Démurger, S., & Xu, H. (2011). Return migrants: The rise of new entrepreneurs in rural China. *World Development, 39*(10), 1847-1861.

Deng, X., & Cordilia, A. (1999). To get rich is glorious: Rising expectations, declining control, and escalating crime in contemporary China. *International Journal of Offender Therapy and Comparative Criminology, 43*(2), 211-229.

Deng, Z. (2000). Pattern of East Asia and government-led strategy in tourism development. *Academic Forum, 3*, 47-50.

Denton, K.A. (2014). *Exhibiting the past: Historical memory and the politics of museums in postsocialist China*. Honolulu: University of Hawai‘i Press.

Diamond, N. (1988). The Miao and Poison: Interactions on China’s Southwest Frontier. *Ethnology, 27*(1), 1-25.

Diamond, N. (1995). Defining the Miao: Ming, Qing and contemporary views. In S. Harrell (Ed.), *Cultural encounters on China's ethnic frontiers* (pp. 92-116). Seattle: University of Washington Press.

Diekmann, A., & Smith, M.K. (Eds.). (2015). *Ethnic and minority cultures as tourist attractions*. Bristol: Multilingual Matters.

Dikotter, F. (2007). *Things modern. Material culture and everyday life in China*. London: Hurst.

Dilley, R.M. (2001). Apprenticeship: Anthropological aspects. In *International Encyclopedia of the Social Sciences.* Oxford: Elsevier/Pergamon Press.

Donaldson, J.A. (2007). Tourism, development and poverty reduction in Guizhou and Yunnan. *The China Quarterly, 190*, 333-351.

Doorne, S., Ateljevic, I., & Bai, Z. (2003). Representing identities through tourism: Encounters of ethnic minorities in Dali, Yunnan Province, People's Republic of China. *International Journal of Tourism Research, 5*(1), 1-11.

Dowding, K. 2008. Agency and structure: Interpreting power relationships. *Journal of Power, 1*(1): 21-36.

Downey, G. (2010). 'Practice without theory': A neuroanthropological perspective on embodied learning. *Journal of the Royal Anthropological Institute, 16*, S22-S40.

Dwyer, S. C., & Buckle, J. L. (2009). The space between: On being an insider-outsider in qualitative research. *International journal of qualitative methods, 8*(1), 54-63.

Dyck, I. (2005). Feminist geography, the 'everyday', and local-global relations: Hidden spaces of place-making. *Canadian Geographer, 49*(3), 233-243.

Eicher, J.B. (1995). *Dress and ethnicity: Change across space and time*. London: Bloomsbury Academic.

Eicher, J.B. (1999). *Dress and ethnicity: Change across space and time*. Oxford: Berg.

Eicher, J.B. (2000). The anthropology of dress. *Dress, 27*(1), 59-70.

Ellen, D. (2003). Art in global context: An evolutionary/functionalist perspective for the 21st century. *International Journal of Anthropology, 18*(4), 245-258.

Elliot, E.A. (2016). Craft consumption and consumer transformation in a transmodern era. *Journal of Business Research, 69*(1), 18-24.

Elson, D. (1995). *Male bias in the development process*. Manchester: Manchester University Press.

Engels, F. (1973). *The origin of the family, private property, and the state: In light of the researches of Lewis H. Morgan*. London: Lawrence & Wishart.

Enguix, B. (2014). Negotiating the field: rethinking ethnographic authority, experience and the frontiers of research. *Qualitative Research, 14*(1), 79-94.

Enloe, C.H. (2000). *Bananas, beaches et bases: Making feminist sense of international politics*. Berkeley: University of California Press.

Epstein, E.H. (1978). On the school as an agent in Shaping national identity. *Education and Urban Society, 10*(2), 107-112.

Ergun, A., & Erdemir, A. (2010). Negotiating insider and outsider identities in the field:"Insider" in a foreign land;"outsider" in one's own land. *Field Methods, 22*(1), 16-38.

Eriksen, T.H. (1997). Ethnicity, race and nation. In M. Guibernau & J. Rex (Eds.), *Ethnicity reader: Nationalism, multiculturalism and migration* (pp. 33-42). Cambridge: Polity Press.

Eriksen, T.H. (2002). *Ethnicity and nationalism: Anthropological perspectives, culture, anthropology and society series* (2nd ed.). London: Pluto Press.

Errington, S. (1994). What became authentic primitive art?. *Cultural Anthropology, 9*(2), 201-226.

Errington, S. (1998). *The death of authentic primitive art and other tales of progress*. Berkeley, CA: University of California Press.

Esman, M. J. (1977). Perspectives on ethnic conflict in industrialized societies. In J.E. Milton (Ed.), *Ethnic conflict in the Western world* (pp. 371-390). Ithaca, NY: Cornell University Press.

Esperanza, J.S. (2008). Outsourcing otherness: Crafting and marketing culture in the global handicrafts market. In G. De Neve, L. Peter, J. Pratt & D. Wood (Eds.) *Hidden hands in the market: Ethnographies of fair trade, ethical consumption, and corporate social responsibility (Research in Economic Anthropology* (Vol. 28, pp. 71-95).

Esperanza, J.S. (2010). Bali's ethnic arts industry: Crafting global identities amidst a national tourist agenda. *Material Culture Review, 71*, 14-23.

Esperanza, J.S. (2014). Crafting place: Globalization and the handicrafts market of Tegallalang. *Antropologi Indonesia, 75*, 22-32.

Evans, G. (2000). Contemporary crafts as souvenirs, artifacts and functional goods and their role in local economic diversification and cultural development. In M. Hitchcock& K. Teague (Eds.), *Souvenirs: The material culture of tourism* (pp. 127-146). Aldershot, UK: Ashgate Publishing Co.

Fabian, J. (2006). The other revisited: Critical afterthoughts. *Anthropological Theory, 6*(2), 139-152.

Falak, S., Chiun, L.M., & Wee, A.Y. (2016). Sustainable rural tourism: An indigenous community perspective on positioning rural tourism. *Turizam: Međunarodni znanstveno-stručni časopis, 64*(3), 311-327.

Falk, C. (2010). The private and public lives of the Hmong Qeej and Miao Lusheng. In N. Tapp & G.L. Yia (Eds.), *The Hmong of Australia: Culture and diaspora* (pp. 123-152). Canberra: Australian National University.

Fan, L. (1992). *Dui Qiandongnan Miaozu Dongzu zizhizhou geti jingji fazhan de sikao* [Research on individual enterprise of Qiandongnan Miao and Dong Autonomous Prefecture]. *Guizhou Ethnic Studies, 7*(2), 87-93.

Fei, X. T. (1981). *Guanyu Woguo Mingzu de Shibie Wenti* [On the issue of Chinese ethnic identification]. *Chinese Social Sciences, 1*, 3-7.

Fei, X. (1985) *Xiongdi minzu zai Guizhou* [Brother nationalities in Guizhou]. Beijing: Sanlian Chubanshe.

Fei, X. (2009). *Guizhou Miaozu diaocha ziliao* [Investigation of the Guizhou Miao]. Guiyang: Guizhou University Press.

Feldman, S. (1992). Crises, poverty, and gender inequality: Current themes and issues. In L. Beneria and S. Feldman, *Unequal burden: Economic crises, persistent poverty, and women's work* (pp. 1-25). Boulder: Westview Press.

Feng, X. (2007). Gender and Hmong women's handicrafts in Fenghuang's 'tourism great leap forward,'China. *Anthropology of Work Review, 28*(3), 17-26.

Feng, X. (2017). *Tourism and prosperity in Miao land: Power and inequality in rural ethnic China*. Lanham: Maryland.

Ferguson, L. (2010). Interrogating 'gender'in development policy and practice: The World Bank, tourism and microenterprise in Honduras. *International Feminist Journal of Politics, 12*(1), 3-24.

Ferguson, L. (2011). Promoting gender equality and empowering women? Tourism and the third millennium development goal. *Current Issues in Tourism, 14*(3), 235-249.

Field, L.W. (2009). Four kinds of authenticity? Regarding Nicaraguan pottery in Scandinavian museums, 2006-08. *American Ethnologist, 36*(3), 507-520.

Fillitz, T., & Saris, A.J. (2012). *Debating authenticity: Concepts of modernity in anthropological perspective*. New York: Berghahn Books.

Fine, G. A. (2006). *Everyday genius self-taught art and the culture of authenticity*. Chicago: University of Chicago Press.

Finnane, A. (2008). *Changing clothes in China: fashion, history, nation*. New York: Columbia University Press.

Fiskesjö, M. (1999). On the 'raw' and the 'cooked' barbarians of imperial China. *Inner Asia, 1*(2), 139-68.

Fong, G.S. (2004). Female hands: Embroidery as a knowledge field in women's everyday life in late imperial and early republican China. *Late Imperial China, 25*(1), 1-58.

Forstner, K. (2013). Women's group-based work and rural gender relations in the southern Peruvian Andes. *Bulletin of Latin American Research, 32*(1), 46-60.

Frank, P. (1989). Recasting Benjamin's aura. *New Art Examiner, 16*(7) 29-31.

Frederick, M. (1993). Rural tourism and economic development. *Economic Development Quarterly, 7*(2), 215-224.

Fromkin, H.L. (1972). Feelings of interpersonal undistinctiveness: An unpleasant affective state. *Journal of Experimental Research in Personality, 6*(2-3), 178-185.

Fu J. (2007). *Xunzhao wuzi shishu* [Seeking for nonliteral history records]. *Guizhou Today, 8,* 52.

Fu, C.H. (2014). Baomaizhi: lishi yange ji lilun yiyi [Putting-out system: Historcial evolution and theoretical significance]. *Social Studies, 29*(2), 189-217.

Fu, Y.C. (2008, Octorber 28). Lüyou fazhan keyi baozhu Guizhou de qingshan lüshui [The protection of Guizhou green hills and blue waters through tourism development] / Interviewer: a China National Radio journist [Real Media File]. Retrieved from http://www.cnr.cn/lvyou1/200810/t20081028_505136076.html

Gaetano, A.M., & Jacka, T. (2004). *On the move: Women and rural-to-urban migration in contemporary China*. New York: Columbia University Press.

Gaetano, A. M. (2015). *Out to work: Migration, gender, and the changing lives of rural women in contemporary China*. Hong Kong: Hong Kong University Press.

Ganguly-Scrase, R. (2003). Paradoxes of globalization, liberalization, and gender equality. *Gender & Society, 17*(4), 544-566.

Gao, F. (2008). What it means to be a 'model minority': Voices of ethnic Koreans in Northeast China. *Asian Ethnicity, 9*(1), 55-67.

Gao, S., Huang, S., & Huang, Y. (2009). Rural tourism development in China. *International Journal of Tourism Research, 11*(5), 439-450.

Garrett, V. (2012). *Chinese dress: from the Qing dynasty to the present*. Vermont: Tuttle Publishing.

Ge, J., Resurreccion, B.P., & Elmhirst, R. (2011). Return migration and the reiteration of gender norms in water management politics: Insights from a Chinese village. *Geoforum, 42*(2), 133-142.

General Office of the People's Government of Guizhou Province. (2004). *The announcement of the establishment of Guizhou ethnic and folk cultures protection committee*. Retrieved from https://www.lawxp.com/statute/s1364530.html

General Office of the State Council. (2005). *Opinions of the general office of the state council on strengthening the protection of intangible cultural heritage of our country*. Retrieved from http://www.gov.cn/gongbao/content/2005/content_63227.htm

George, W. (2005). *Commodifying local culture for rural community tourism development: Theorizing the commoditization process*. Abstract of papers presented at the Eleventh Canadian Congress on Leisure Research May 17-20. Nova Scotia: Mount Saint Vincent University.

Gherardi, S., & Perrotta, M. (2014). Gender, ethnicity and social entrepreneurship: Qualitative approaches to the study of entrepreneuring. In Karatas-Ozkan, M., & Chell, E (Ed.) *Handbook of research in small business and entrepreneurship*, (pp. 130-147). Cheltenham: Edward Elgar Publishing.

Giddens, A. (1984). *The constitution of society: Outline of the theory of structuration*. Cambridge: Polity Press.

Giddens, A. (2006). Debating the social model: Thoughts and suggestions. In P. Diamond (Ed.), *The Hampton Court Agenda: A Social Model for Europe*, (pp. 95-150). London: Policy Network.

Girshick, P.D. (2008). Envisioning art worlds: New directions in the anthropology of art. In K. Zijlmans & W. van Damme (Eds.), *World art studies: Exploring concepts and approaches* (pp. 219-233). Amsterdam: Valiz.

Gladney, D.C. (1994). Representing nationality in China: Refiguring majority/minority identities. *The Journal of Asian Studies, 53*(1), 92-123.

Gladney, D.C. (2004a). *Dislocating China: Reflections on Muslims, minorities and other subaltern subjects*. London: Hurst.

Gladney, D.C. (2004b). Ethnic identity in China: The rising politics of cultural difference. *Democratization and identity: Regimes and ethnicity in East and Southeast Asia*, 133-151.

Goddard, V. (2000). *Gender, agency and change: Anthropological perspectives*. London: Routledge.

Goddard, V.A. (2003). *Gender, agency and change: Anthropological perspectives*. London: Routledge.

Gold, T., Guthrie, D., & Wank, D.L. (2002). *Social connections in China institutions, culture, and the changing nature of Guanxi*. Cambridge, UK: Cambridge University Press.

Goodkind, D., & West, L. A. (2002). China's floating population: Definitions, data and recent findings. *Urban studies, 39*(12), 2237-2250.

Goodman, D.S. (2004). The campaign to "Open up the West": national, provincial-level and local perspectives. *The China Quarterly, 178*, 317-334.

Goodwin, H. (2002). Local community involvement in tourism around national parks: opportunities and constraints. *Current Issues in Tourism, 5*(3-4), 338-360.

Goody, E.N. (1989). Learning, apprenticeship and the division of labor. In M.W. Coy (Ed.), *Apprenticeship: From theory to method and back again* (pp. 233-56). New York: SUNY Press.

Gorman-Murray, A. (2013). Urban homebodies: Embodiment, masculinity, and domesticity in inner Sydney. *Geographical Research, 51*(2), 137-144.

Gowlland, G. (2012). Learning craft skills in China: Apprenticeship and social capital in an artisan community of practice. *Anthropology & Education Quarterly, 43*(4), 358-371.

Graburn, N.H. (1979). *Ethnic and tourist arts: Cultural expressions from the fourth world*. Berkeley: University of California Press.

Graburn, N.H. (1984). The evolution of tourist arts. *Annals of Tourism Research, 11*(3), 393-419.

Graburn, N.H. (2018). Tourism and prosperity in Miao land: Power and inequality in rural ethnic China. *Mountain Research and Development, 38*(4), 407-409.

Gray, V. (1999). The importance of the object: an experiential study of the object as functional, decorative, sacred and profane. In Xie S. (Ed.), *Symposium on Aboriginal art and handicrafts: Tradition, innovation and business* (pp. 9-28). Taiwan: Beitou Museum.

Greenwood, D.J. (1989). Culture by the pound: An anthropological perspective on tourism as cultural commoditization. In V.L. Smith (Ed.), *Hosts and guests: The anthropology of tourism* (pp. 171-185). Philadelphia: University of Pennsylvania Press.

Grijp, P.V. (2009). *Art and exoticism: An anthropology of the yearning for authenticity*. Münster: Lit.

Guizhou Annals Compilation Committee. (1994). *Guizhou sheng Taijiang xian shangye zhi* [Guizhou Taijiang County annals of commercial development]. Beijing: China Local Records Publishing House.

Guizhou Chronicles Compilation Committee. (2009). *Guizhou shengzhi lüyou zhi* [The Chronicle of Guizhou Tourism]. Guiyang: Guizhou People's Press.

Guizhou People's Press. (2009). *Guizhou shengzhi luyou zhi* [The Chronicle of Guizhou Tourism]. Guiyang: Guizhou People's Press.

Guizhou Provincial Gazetteer. (1993). *Guizhou shengqing xiuding ban*. Revised Edition. Guiyang: Guizhou People's Housing Press.

Guizhou Provincial Institue of Ethnology. (2009). *Minzu wenti wuzhong congshu:Miaozu shehui lishi diaocha* [Five types of national minority series: Investigation on Miao society and history]. Bejing: Publishing House of Minority Nationalities.

Guizhou Provincial Tourism Administration. (2007). *Guizhou xiangcun luyou guihua 2006-2020* [Guizhou rural tourism plan 2006-2020]. Guiyang: Guizhou People's Press.

Guizhou Tourism Bureau. (2000). *Guizhou luyou zhinan* [Guizhou tour guide]. Guiyang: Guizhou People's Press.

Guizhou Tourism Bureau. (2002). *Qian Guizhou you* [Guizhou travel guide]. Hong Kong: Hong Kong China Tourism Press.

Gul, F., & Lu, H. (2011). *Truths and half truths: China's socio-economic reforms from 1978-2010*. Oxford: Chandos Publishing.

Gustafsson, B., & Shi, L. (2003). The ethnic minority-majority income gap in rural China during transition. *Economic Development and Cultural Change, 51*(4), 805-822.

Guthrie, D. (2012). *China and globalization: The social, economic and political transformation of Chinese society*. New York: Routledge.

Haas, E. B. (1993). Nationalism: an instrumental social construction. *Millennium, 22*(3), 505-545.

Hall, S. (1996). New ethnicities. In D. Morley & K.-H. Chen (Eds.), *Stuart Hall: Critical dialogues in cultural studies* (pp. 442-451). London: Routledge.

Halter, M. (2002). *Shopping for identity: The marketing of ethnicity*. New York: Schocken Books.

Handique, K.J. (2010). *Handicrafts in Assam*. New Delhi: Kalpaz Publications.

Handler, R. (1986). Authenticity. *Anthropology Today, 2*(1), 2.

Hansen, K.T. (2004). The world in dress: Anthropological perspectives on clothing, fashion, and culture. *Annual Review of Anthropology, 33*(1), 369-392.

Hansen, M.H. (1999). Teaching backwardness of equality: Chinese state education among the Tai in Sipsong Pana. In G.A. Postiglione (Ed.), *China's national minority education: Culture, schooling, and development* (pp. 243-280). New York: Falmer Press.

Hansen, M.H. (2011). *Lessons in being Chinese: Minority education and ethnic identity in Southwest China*. Seattle: University of Washington Press.

Hao, X.M., & Yang, P. (2010). Guizhou Miaoxiu muti tuan de wenhua neihan he shenmei yanjiu [The esthetic analysis and the cultural connotation on the maternal design art of Guizhou Miao embroidery]. *Journal of Yunnan Agricultural University, 4*(1), 98-100.

Harrell, S. (1995). Introduction: Civilizing projects and the reactions to them. In S. Harrell (Ed.), *Cultural encounters on China's ethnic frontiers* (pp. 1-36). Seattle: University of Washington Press.

Harrell, S. (2009). Reading threads: Clothing, ethnicity, and place in Southwest China. In University of Hawai'i Art Gallery, *Writing with thread: Traditional textiles of southwest Chinese minorities: A special exhibition from the collection of Huang Ying Feng and the Evergrand Art Museum in Taoyuan, Taiwan* (pp. 99-111). Honolulu: University of Hawai'i Art Gallery.

Harrell, S. (2001). *Ways of being ethnic in Southwest China*. Seattle: University of Washington Press.

Harrell, S. (Ed.) (1995). *Cultural encounters on China's ethnic frontiers*. Seattle: University of Washington Press.

Harris, J. (2014). Meeting the challenges of the handicraft industry in Africa: Evidence from Nairobi. *Development in Practice, 24*(1), 105-117.

Hartmann, H. (1979a). Capitalism, patriarchy and job segregation by sex. In Z.R. Eisenstein (Ed.), *Capitalist patriarchy and the case for socialist feminism* (pp. 206-247). New York: Monthly Review Press.

Hartmann, H. (1979b). The unhappy marriage of Marxism and feminism: Towards a more progressive union. *Capital & Class, 3*(2), 1-33.

Harvey, D. (2002). The art of rent: globalization, monopoly and the commodification of culture. *Socialist Register*, 93-110.

Hasmath, R. (2014a). *The interactions of ethnic minorities in Beijing* (Working Paper No. 111). Oxford: Centre on Migration, Policy and Society, University of Oxford.

Hasmath, R. (2014b). What explains the rise of ethnic minority tensions in China? In *American Sociological Association Annual Meeting (San Francisco, CA),* (pp. 16-19).

Hasmath, R. (2016). The identification settlement and representation of ethnic minorities in Beijing. In R. Hasmath (Ed.), *Managing ethnic diversity: Meanings and practices from an international perspective* (pp. 85-102). Abingdon: Routledge.

Hassanin, L. (2009). Egyptian women artisan facing the demands of modern markets: caught between a rock and hard place. In B. Ireke, & W. Anna (Eds.), *African women and ICTs investigating technology, gender and empowerment* (pp. 56-63). Ottawa: Internation Deveopment Research Centre.

Haven - Tang, C., & Jones, E. (2012). Local leadership for rural tourism development: A case study of Adventa, Monmouthshire, UK. *Tourism Management Perspectives, 4*, 28-35.

Hay, M.C. (2010). Suffering in a productive world: Chronic illness, visibility, and the space beyond agency. *American Ethnologist, 37*(2), 259-274.

Hayfield, N., & Huxley, C. (2015). Insider and outsider perspectives: Reflections on researcher identities in research with lesbian and bisexual women. *Qualitative Research in Psychology, 12*(2), 91-106.

He, Z. (1998). *Dashan de nüer: Shan qu funü koushu* [Daught of the mountain: Oral history of rural women]. Guiyang: Guizhou People Publishing House.

He, Z. H. (2012). Embroidery speaks: What does Miao embrodiery tell us? In Wilkerson, J., & Parkin, R. (Eds.). *Modalities of change: the interface of tradition and modernity in East Asia* (pp.62-92). New York: Berghahn.

Heberer, T. (1989). *China and its national minorities: Autonomy or assimilation?* Armonk, New York: Sharpe.

Heberer, T. (2007). *Doing business in rural China: Liangshan's new ethnic entepreneurs*. Seattle: University of Washington Press.

Heberer, T. (1989). *China and its national minorities: Autonomy or assimilation*. Armonk: Sharp, Inc.

Heller, A. (1984). *Everyday life*. London: Routledge & Kegan Paul.

Henderson, J. (2003). Ethnic heritage as a tourist attraction: The Peranakans of Singapore. *International Journal of Heritage Studies, 9*(1), 27-44.

Hervik, P. (2003). Shared reasoning in the field: Reflexivity beyond the author. In K. Hastrup & P. Hervik (Eds.), *Social experience and anthropological knowledge* (pp.59-75). Routledge.

Hillman, B. (2003). Paradise under construction: minorities, myths and modernity in northwest Yunnan. *Asian Ethnicity*, *4*(2), 175-188.

Hitchcock, M., King, V.T., & Parnwell, M. (2010). *Heritage tourism in Southeast Asia*. Honolulu, HI: University of Hawaii Press.

Hobsbawm, E.J., & Ranger, T.O. (2004). *The invention of tradition*. Cambridge: Cambridge University Press.

Hochschild, A.R., & Machung, A. (2012). *The second shift: Working families and the revolution at home*. New York: Penguin Books.

Hodos, T. (2010). Globalization and colonization: A view from Iron Age Sicily. *Journal of Mediterranean Archaeology, 23*(1), 81-106.

Hoerig, K.A. (2003). *Under the palace portal: Native American artists in Santa Fe*. University of New Mexico Press: Albuquerque, NM.

Holbig, H. (2004). The emergence of the campaign to open up the West: Ideological formation, central decision-making and the role of the provinces. *The China Quarterly, 178*, 335-357.

Hou, J.N., Yan, H.H., & Li, X.D. (2010). Thoughts on the exploration of regional culture elements in the tourism performing arts: A case study of "Impression the Liu Sanjie". *Tourism Forum, 3*(3), 284-287.

Hsu, C.L. (2017). *Social entrepreneurship and citizenship in China: The rise of NGOs in the PRC*. London: Routledge.

Huang, G., & Shi, L. (2005). Zhongguo de mingzu shibie [*Ethnic identification in China*]. Beijing: Publishing House of Minority Nationalities.

Hughes, R. (1988). Evoking the spirit ancestors. *Time*, 31 October, 79-80.

Hume, D. (2013). *Tourism art and souvenirs: The material culture of tourism*. London: Routledge.

Hunan People's Publishing Press. (1986). Xiangxi Miaozu diaocha baogao [*Research report on the Miao of Western Hunan*]. Changsha: Hunan People's Publishing Press.

Iacono, J., Brown, A., & Holtham,C. (2009). Research methods-a case example of participant observation. *Electronic Journal of Business Research Methods, 7*(1), 39-46.

Ichaporia, N. (1980). *Crazy for foreign: The exchange of goods and values on the international ethnic arts market*. Berkeley: University of California.

Information Office of the State Council of the People's Republic of China. (1999a). *White paper: China's ethnic policy and common prosperity and development of all ethnic groups*. Retrieved from http://www.china.org.cn/government/whitepaper/node_7078073.htm

Information Office of the State Council of the Peoples Republic of China. (1999b). *White Paper: Ethnic minorities policy in China*. Retrieved from http://www.china-un.org/eng/gyzg/xizang/t420274.htm

Information Office of the State Council of the Peoples Republic of China. (2009). *China's Ethnic Policy and Common Prosperity and Development of All Ethnic Groups*. Available at: http://www.china.org.cn/government/whitepaper/node_7078073.htm

Ingold, T. (2000). *The perception of the environment: essays on livelihood, dwelling and skill*. Abingdon: Routledge.

Ivory, C.S. (1999). Art, tourism, and cultural revival in the Marquesas Islands. *Unpacking culture: Art and commodity in colonial and postcolonial worlds,* 317-333.

Jacka, T. (2014). *Rural Women in Urban China: Gender, Migration, and Social Change: Gender, Migration, and Social Change*. London: Routledge.

Jackson, J. (2006). Developing regional tourism in China: The potential for activating business clusters in a socialist market economy. *Tourism Management, 27*(4), 695-706.

Jackson, P. (1983). Principles and problems of participant observation. *Geografiska Annaler. Series B, Human Geography, 65*(1), 39-46.

Jackson, P. (1999). Commodity cultures: the traffic in things. *Transactions of the Institute of British Geographers, 24*(1), 95-108.

James, A., Hockey, J. L., & Dawson, A. H. (Eds.), (1997). *After writing culture: epistemology and praxis in contemporary anthropology (No. 34)*. East Sussex: Psychology Press.

Jenkins, R. (2008). *Rethinking ethnicity: Arguments and explorations* (2nd ed.). London: Sage Publications.

Jenks, R.D. (1994). *Insurgency and social disorder in Guizhou: The "Miao" rebellion, 1854-1873*. Honolulu: University of Hawaii Press.

Jennings, M. (2004). *Alaska Native Political Leadership and Higher Education: One University, Two Universes*. Walnut Creek: AltaMira Press.

Jiang, B.Z., & Fang, S.N. (2000). *Miaozu fushi tuzhi - Qiandongnan* [Miao customs of Southeast Guizhou]. Taiwan: Fu Jen Catholic University Press.

Jones, S. (1997). *The archaeology of ethnicity: constructing identities in the past and present*. London: Routledge.

Jongeward, C. (2001). Alternative entrepreneurship in Thailand: weavers and the northeastern handicraft and women's development network. *Convergence, 34*(1), 83-96.

Joppe, M. (1996). Sustainable community tourism development revisited. *Tourism Management, 17*(7), 475-479.

Jules-Rosette, B. (1986). Aesthetics and market demand: the structure of the tourist art market in three African settings. *African Studies Review, 29*(1), 41-59.

Kabeer, N. (2005). Gender equality and women's empowerment: A critical analysis of the third millennium development goal 1. *Gender & Development, 13*(1), 13-24.

Kaewla, W. (2017). Local craft-manship and wisdom on community health system of Khmer ethnic groups in Surin Province,Thailand and Siemreap Province, Cambodia. *PEOPLE: International Journal of Social Sciences, 3*(2), 1049-1056.

Kaltmeier, O. (2016). *Selling ethnicity: urban cultural politics in the Americas*. London: Routledge.

Kamer, H. (1974). The authenticity of African sculptures. *Arts d'Afrique Noir, 12*, 168.

Kapferer, B. (2013). How anthropologists think: configurations of the exotic. *Journal of the Royal Anthropological Institute, 19*(4), 813-836.

Kasfir, S.L. (1992). African art and authenticity: a text with a shadow. *African Arts, 25*(2), 41-97.

Keane, W. (2003). Self-interpretation, agency, and the objects of anthropology: Reflections on a genealogy. *Comparative Studies in Society and History, 45*(2), 222-248.

Keane, W. (2007). *Christian moderns: Freedom and fetish in the mission encounter* (Vol. 1). Berkeley: University of California Press.

Kelly, W.W. (1986). Rationalization and nostalgia: Cultural dynamics of new middle-class Japan. *American Ethnologist, 13*(4), 603-618.

Kemp, T. (1985). *Industrialization in nineteenth century Europe*. London: Routledge.

Khadaroo, J., & Seetanah, B. (2008). The role of transport infrastructure in international tourism development: A gravity model approach. *Tourism Management, 29*(5), 831-840.

Kim, S., & Littrell, M.A. (2001). Souvenir buying intentions for self versus others. *Annals of Tourism Research, 28*(3), 638-657.

Kirtsoglou, E., & Theodossopoulos, D. (2004). 'They are taking our culture away' Tourism and culture commodification in the Garifuna community of Roatan. *Critique of Anthropology, 24*(2), 135-157.

Kishor, S., & Kamla G. (2004). Women's empowerment in India and its states: Evidence from the NFHS. *Economic and Political Weekly, 39*(7), 694-712.

Kleymeyer, C.D. (1994). *Cultural expression and grassroots development: Cases from Latin America and the Caribbean*. Boulder, Col.: L. Rienner.

Knight, J., & Song, L. (2003). Chinese peasant choices: Migration, rural industry or farming. *Oxford Development Studies, 31*(2), 123-47.

Ko, D. (1995). *Teachers of the inner chambers: Women and culture in seventeenth-century China*. Stanford, California: Stanford University Press.

Ko, D. (2007). *Cinderella's sisters: a revisionist history of footbinding*. Berkeley, CA: University of California Press.

Kondo, D.K. (2009). *Crafting selves: Power, gender, and discourses of identity in a Japanese workplace*. Chicago: University of Chicago Press.

Kopytoff, A. (1988). The cultural biography of things: commoditization as process. In A. Appadurai (Ed.), *The social life of things: Commodities in cultural perspective* (pp. 64-94). Cambridge: Cambridge University Press.

Krishnaraj, M. (1992). Women craft workers as security for family subsistence. *Economic and Political Weekly, 27*(17), 7-17.

Kunstadter, P. (1984). Cultural ideals, socioeconomic change, and household composition: Karen, Lua', Hmong and Thai in Northwestern Thailand. *Households: comparative and historical studies of the domestic group, 324*, 299.

Kurin, Richard. (2004). Safeguarding Intangible Cultural Heritage in the 2003 UNESCO Convention: a critical appraisal. *Museum International, 56*, 66 - 77.

Kyejjusa, S., Gough, K., & Kristensen, S.B.P. (2016). Young female entrepreneurs in Uganda: Handicraft production as a livelihood strategy. In K.V. Gough & T. Langevang (Eds.), *Young entrepreneurs in Sub-Saharan Africa* (pp. 193-205). London: Routledge.

Lacher, G., & Slocum, S.L. (2013). Souvenir development in peripheral areas: Local constraints in a global market. In J. Cave, L. Jolliffe, & T. Baum (Eds.), *Tourism and souvenirs: Glocal perspectives from the margins* (pp. 98-118). Buffalo, NY: Channel View Publications.

Lang, L. (2008). Minzu lüyou shikong zhong de shaoshu minzu nüxing shehui juese de shanbian [Transformation of the female role of minority people in tourism]. *Journal of Guizhou Minzu University(Philosophy and Social Sciences), 1,* 143-147.

Lave, J., & Wenger, E. (1991). *Situated learning: Legitimate peripheral participation*. Cambridge: Cambridge University Press.

Lawson, J. (2017). *A frontier made lawless: Violence in upland Southwest China, 1800-1956*. Vancouver, BC: UBC Press.

Layton, R. (1991). *The anthropology of art*. Cambridge: Cambridge University Press.

Le Mare, A. (2012). 'Show the world to women and they can do it': Southern fair trade enterprises as agents of empowerment. *Gender & Development, 20*(1), 95-109.

Leacock, E., Abernethy, V., & Bardhan, A, (1978). Women's status in egalitarian society: Implications for social evolution. *Current Anthropology, 19*(2), 247-275.

Lee, G.Y., & Tapp, N. (2010). *Culture and customs of the Hmong*. Santa Barbara, CA: Greenwood.

Lee, K. (2007). Questioning a neoliberal urban regeneration policy. *International Journal of Cultural Policy: The Rhetoric of "Cities of Culture" and the City of Gwangju, Korea, 13*(4), 335-347.

Leibold, J. (2010). More than a category: Han supremacism on the Chinese Internet. *The China Quarterly, 203*, 539-59.

Leibold, J., & Chen, Y. (Eds.). (2014). *Minority education in China: Balancing unity and diversity in an era of critical pluralism*. Hong Kong: Hong Kong University Press.

Leong, L.W.T. (1997). Commodifying ethnicity: State and ethnic tourism in Singapore. In M. Picard & Wood, R. E. (Eds.), *Tourism, ethnicity, and the state in Asian and Pacific societies* (pp. 71-98). Honolulu: University of Hawai'i Press.

Li, B. (2006). Floating population or urban citizens? Status, social provision and circumstances of rural-urban migrants in China. *Social policy & administration, 40*(2), 174-195.

Li, J. (2003). Playing upon fantasy: women, ethnic tourism and the politics of identity construction in contemporary Xishuang Banna, China. *Tourism Recreation Research, 28*(2), 51-65.

Li, P., Ryan, C., & Cave, J. (2016). Chinese rural tourism development: Transition in the case of Qiyunshan, Anhui. *Tourism Management, 55*, 240-260.

Li, Q. (2002). *Miaozu toushi gaishuo* [Research on Miao headdress]. *Guizhou Ethnic Studies, 27*(4), 49-55.

Li, X. (2016). *Xiaojie yu chonggou: Xiandaixing tiyan yu Miaozu xiangcun funü de jiating shenghuo* [Deconstruction and reconstruction: Modern experience and Miao rural women in family life]. Shanghai: Joint Publishing.

Li, Y., & Hinch, T. (1997). Ethnic tourism attractions and their prospect for sustainable development at two sites in China and Canada. *Asia Pacific Journal of Tourism Research, 2*(1), 5-18.

Liang, J. (2009). *Miaozu fazhanshi* [Miao development history]. Guiyang: Guizhou University Press.

Liebl, M., & Roy, T. (2003). Handmade in India: Preliminary analysis of crafts producers and crafts production. *Economic and Political Weekly*, 5366-5376.

Light, I. & Bonacich, E. (1988). *Immigrant entrepreneurs: Koreans in Los Angeles*. Los Angeles: University of California Press.

Lin, J. (1997). Policies and practices of bilingual education for the minorities in China. *Journal of multilingual and multicultural development*, *18*(3), 193-205.

Lindholm, C. (2008). *Culture and authenticity*. Malden, Mass: Blackwell Publishing.

Ling, C. (2003). Miaozu fushi wenhua [Miao traditional costume]. In C. Ling, & Y. Rui (Eds.), *Xiangxi Miaozu Diaocha Baogao*[Research report on the Miao of western Hunan] (pp.15-28). Beijing: Publishing House of Minority. (Original work published 1947)

Littlefield, A., & Reynolds, L.T. (1990). The putting-out system: Transitional form or recurrent feature of capitalist production? *The Social Science Journal, 27*(4), 359-372.

Littlemore, J. (2003). The effect of cultural background on metaphor interpretation. *Metaphor and symbol, 18*(4), 273-288.

Littrell, M.A. (1990). Symbolic significance of textile crafts for tourists. *Annals of Tourism Research, 17*(2), 228-245.

Littrell, M.A., Anderson, L.F., & Brown, P.J. (1993). What makes a craft souvenir authentic? *Annals of Tourism Research, 20*(1), 197-215.

Litzinger, R.A. (2000). *Other Chinas: The Yao and the politics of national belonging*. Durham: Duke University Press.

Liu, J., & Nie K. (2018). Guizhou wenhua zixin fazhan lujing sikao: zuo da zuo qiang "Duocai Guizhou" wenhua pingpai [On the development paths for Guizhou's cultural confidence: A case study of "colourful Guizhou" as a cultural brand]. *Journal of Guizhou Minzu University(Philosophy and Social Sciences) 6,* 1-24.

Liu, T. (2013). Re-constructing cultural heritage and imagining Wa primitiveness in the China/Myanmar borderlands. In T. Blumenfield & H. Silverman (Eds), *Cultural heritage politics in China* (pp. 161-184). New York, NY: Springer.

Liu X. K. (2015, Novermber 25). Zuohao shaoshu minzu tese cunzhen baohu jiakuai tuijin minzu diqu tongbu xiaokang chuangjian [Protecting traditional ethnic villages and promoting their economic growth]. Guizhou *Ethnic News.*

Liu, Y., Li. L., & Chen, J. (2011, Novermber 3). Jishijian lao Miaoyi wuyi chengjiao [Dozens of old Miao embroideries did not sell]. *Jinqian Online*. Retrieved from http://news.ifeng.com/gundong/detail_2011_11/03/10382520_0.shtml

Lloyd, B., Ennis, F., & Alkinson, T. (1994). *The power of women-positive literacy work: Program-based action research*. Halifax, NS: Fernwood.

Lo, W., & Wang, B. (1988). Ping Qian Jilue [*Record of the Pacification of Guizhou*], Guiyang: Guizho People's Press. (original work publised 1879)

Logan, W.S. (2007). Closing Pandora's box: human rights conundrums in cultural heritage protection. In H. Silverman & D. Fairchild Ruggles (Eds.), *Cultural heritage and human rights* (pp. 33-52). New York: Springer.

Long, B. Y. (1991) Buyizu diqu fazhan shangpin jingji de sikao [Thouhts on the commodity economy development among the Buyi region]. *Study on the Buyi, 0*, 37-44.

Long, Y. (2011). Guizhou Miaozu cixiu zhong de muti chongbai [Maternity worship in embroidery pattern of Miao in Guizhou]. *Guizhou Ethnic Studies, 32*(2), 79-81.

Long, Y. (2012). Chuancheng baohu shijiao xia Guizhou Miaozu cixiu lüyou shangpin kaifa sheji de yiyi yu celüe [On the significance and the measures concerned of the tourist souvenirs design of Guizhou Mioa embroidery from the perspective of protection and its imparting]. *Guizhou Ethnic Studies, 33*(5), 54-56.

Löw, S.M. (2003). Lawrence-Zúñiga: Locating culture. In S.M. Löw and D. Lawrence-Zúñiga (Eds.), *The anthropology of space and place, locating culture* (pp. 1-48). Oxford: Blackwell Publishing.

Lu, A. (2002). Economic reforms and welfare changes in China. In A. Lu & M.F. Montes (Eds.), *Poverty, income distribution and well-being in Asia during the transition* (pp. 83-106). London: Palgrave Macmillan.

Lucas, L.E. (2007). *Unpacking globalization: Markets, gender, and work*. Lanham: Lexington Books.

Luckman, S. (2015). *Craft and the creative economy*. Houndmills, Basingstoke, Hampshire: Palgrave Macmillan.

Luo, Y. (1992). *Miaozu fushi de xingcheng yu niubian* [The origins and development of Miao costume]. *Guizhou Social Sciences, 11*(26), 27-31.

Ma, Y. (1981). *Zhongguo shaoshu minzu* [Chinese ethnic groups]. Beijing: The People's Press.

MacCannell, D. (1976). *The tourist: A new theory of the leisure class*. Berkeley: University of California Press.

MacDowell, M. (1989). *Stories in thread: Hmong pictorial embroidery*. Ann Arbor: Michigan State University Museum.

Mackerras, C. (1995). *China's minority cultures: Identities and integration since 1912*. Melbourne: Longman.

Mackerras, C. (2003). *China's ethnic minorities and globalisation*. London: Routledge.

Mackerras, C. (2005). China's ethnic minorities and the middle classes: an overview. *International Journal of Social Economics, 32*(9), 814-826.

MacLeod, N. (2006). Cultural tourism: Aspects of authenticity and commodification. In M.K. Smith (Ed.), *Cultural tourism in a changing world: Politics, participation and (re) presentation* (pp. 177-190). Clevedon, UK: Channel View Publications.

Madhavan, R., & Grover, R. (1998). From embedded knowledge to embodied knowledge: New product development as knowledge management. *Journal of Marketing, 62*(4), 1-12.

Maher, J.M., Lindsay, J., & Franzway, S. (2008). Time, caring labour and social policy: Understanding the family time economy in contemporary families. *Work, Employment and Society, 22*(3), 547-558.

Mahmood, S. (2004). *Politics of piety: The Islamic revival and the feminist subject*. Princeton: Princeton University Press.

Mahmood, S. (2006). Agency, Performativity, and the Feminist Subject. In E.T. Armour & S. M. S Ville (Eds.) *Bodily Citations: Religion and Judith Butler* (pp. 177-221). New York: Columbia University Press

Mahmud, S., Shah, N.M., & Becker, S. (2012). Measurement of women's empowerment in rural Bangladesh. *World Development, 40*(3), 610-619.

Marion, J. L. (1992). The increasing value of art and historical artefacts. In Whelchel, Harriet. *Caring for Your Collections* (pp. 165-171). New York: Harry N.Abrams, Inc.

Makang, J-M. (1997). Of the good use of tradition: keeping the critical perspective in African philosophy. In E.C. Eze (Ed.), *Postcolonial African philosophy: a critical reader* (pp. 324-338). Cambridge, Mass.: Blackwell.

Matsuura, K. (2004). Preface: views and vision of the intangible. *Museum International, 221/222*, 4-5.

Malinowski, B. (1922). *Argonauts of the Western Pacific: An account of native enterprise and adventure in the archipelagoes of Melanesian New Guinea*. London and New York: G. Routledge and E. P. Dutton.

Mann, S.L. (2011). *Gender and sexuality in modern Chinese history* (Vol. 9). Cambridge: Cambridge University Press.

Mansperger, M. (1995). Tourism and cultural change in small-scale societies. *Human Organization, 54*(1), 87-94.

Manwa, H. (2008). Enhancing participation of women in tourism. In G. Moscardo (Ed.), *Building community capacity for tourism development* (pp. 116-122). Oxfordshire: CAB International.

Mao Z. (1956). *Analysis of the classes in Chinese society.* Beijing: People's Publishing House.

Marchand, T.H.J. (2011). *Making knowledge: explorations of the indissoluble relation between mind,body and environment*. Hoboken: John Wiley & Sons.

Markowitz, S.J. (1994). The distinction between art and craft. *Journal of Aesthetic Education, 28*(1), 55.

Markwick, M.C. (2001). Tourism and the development of handicraft production in the Maltese islands. *Tourism Geographies, 3*(1), 29-51.

Maruyama, N.U., Yen, T.H., & Stronza, A. (2008). Perception of authenticity of tourist art among Native American artists in Santa Fe, New Mexico. *International Journal of Tourism Research, 10*(5), 453-466.

Marx, K., (1974). *Capital* (C. Paul & E. Paul, Trans.). London: Dent.

Mathieu, C. (1996). *Lost kingdoms and forgotten tribes: Myths, mysteries and mother-right in the history of the Naxi nationality and the Mosuo people of southwest China* (PhD Dissertation). Murdoch University, Australia.

McCarthy, S. (2009). *Communist multiculturalism: Ethnic revival in southwest China*. Seattle: University of Washington Press.

McDowell, L. (2007). *Gender, identity and place: Understanding feminist geographies*. Minneapolis: University of Minnesota Press.

McKhann, C. (1995). The Naxi and the nationalities questions. In S. Harrell (Ed.), *Cultural encounters on China's ethnic frontiers* (pp. 39-62). Seattle: University of Washington Press.

McKinley, T. (1996). *The distribution of wealth in rural China*. New York: M.E. Sharpe.

Medina, L.K. (2003). Commoditizing culture: Tourism and Maya identity. *Annals of Tourism Research, 30*(2), 353-368.

Meethan, K. (2001). *Tourism in global society: Place, culture, consumption*. Basingstoke, Hampshire: Palgrave.

Mei-ling Chien. (2009). *Guizhou dongbu gaodi Miaozu de qinggan yu hunying* [Emotion and marriage of the Hmub in Eastern Guizhou]. Guiyang: Guizhou University Press.

Merleau-Ponty, M. (1962). Phenomenology of perception (trans. C. Smith). London: Routledge & Kegan Paul. (original work published 1945).

Merriam, S. B., Johnson-Bailey, J., Lee, M. Y., Kee, Y., Ntseane, G., & Muhamad, M. (2001). Power and positionality: Negotiating insider/outsider status within and across cultures. *International Journal of Lifelong Education, 20*(5), 405-416.

Miao, X.L. (2004). *Lvyou shangping gainianxing dingyi yu lvyou jinianping de defang tese* [Tourism merchandise and souvenirs: Discussion on the conceptual definitions and local features]. *Tourism Tribune, 19*(1): 27-31.

Miettinen, S. (2010). Raising the status of Lappish communities through tourism development. In M.K. Smith (Ed.), *Cultural tourism in a changing world: Politics, participation and (re)presentation* (pp. 159-174). Clevedon, UK: Channel View Publications.

Miller, D. (2010). *Stuff*. Cambridge: Polity Press.

Ministry of Culture (2003). *Views on supporting and promoting culture industries.* Retrieved from http://www.ccm.gov.cn/zgwhscw/gfxwj/199809/4e37a6255 10c4124aaea16433e6fdabb.shtml

Ministry of Culture and Tourism of the People's Republic of China. (2004). *National List of Intangible Cultural Heritage of China.* Retrieved from http://www.ihchina.cn/project#target1

Mitchell, R. E., & Reid, D. G. (2001). Community integration: Island tourism in Peru. *Annals of tourism research, 28*(1), 113-139.

Mogindol, S.H., & Bagul, A.H.B.B.P. (2016). Tourists' perceptions about an appealing handicraft. *Tourism, Leisure and Global Change, 1*(1), 10-24.

Moore, E. (2008). The silver hand: Authenticating the Alaska native art, craft and body. *The Journal of Modern Craft, 1*(2), 197-219.

Morais, D.B., Dong, E., & Yang, G. (2006). The ethnic tourism expansion cycle: The case of Yunnan province, China. *Asia Pacific Journal of Tourism Research, 11*(2), 189-204.

Mosquera, G. (2002). The Marco Polo syndrome. In R. Araeen, S. Cubitt and Z. Sardar (Eds,), *The third text reader on art, culture and theory* (pp. 267-273), London: Continuum.

Mosse, D. (2006). Anti‐social anthropology? Objectivity, objection, and the ethnography of public policy and professional communities. *Journal of the Royal Anthropological Institute, 12*(4), 935-956.

Moswete, N., & Lacey, G. (2015). “Women cannot lead”: empowering women through cultural tourism in Botswana. *Journal of Sustainable Tourism, 23*(4), 600-617.

Movono, A., & Dahles, H. (2017). Female empowerment and tourism: a focus on businesses in a Fijian village. *Asia Pacific Journal of Tourism Research, 22*(6), 681-692.

Mu, G.M., & Hu, Y. (2016). *Living with vulnerabilities and opportunities in a migration context: Floating children and left-behind children in China*. Rotterdam: Sense.

Mullaney, T. (2004). Ethnic classification writ large: the 1954 Yunnan province ethnic classification project and its foundations in republican-era taxonomic thought. *China Information, 18*(2), 207-241.

Mullaney, T. (2011). *Coming to terms with the nation: Ethnic classification in modern China*. Berkeley: University of California Press.

Mullin, M.H. (2001). *Culture in the MARKETPLACE: Gender, art, and value in the American Southwest*. Durham: Duke University Press.

Murakami, D. (2008). Tourism development and propaganda in contemporary Lhasa, Tibet Autonomous Region (TAR), China. In J. Cochrane (Ed.), *Asian tourism: Growth and change* (pp. 55-68). Amsterdam: Elsevier.

Mustafa, M. (2011). Potential of sustaining handicrafts as a tourism product in Jordan. *International Journal of Business and Social Science, 2*(2),145-152.

Myers, F. (2006). 'Primitivism', anthropology, and the category of 'primitive art'. In C. Tilley, P. Spyer, W. Keane, S. Küchler, & M. Rowlands (Eds.), *Handbook of material culture* (pp. 267-284). London: Sage Publications.

Myers, R.H. (1965). Cotton textile handicraft and the development of the cotton textile industry in modern China. *The Economic History Review, 18*(3), 614.

Myers, R.H. (1974). Transformations and continuity in Chinese economic and social history. *The Journal of Asian Studies, 33*(2), 265-277.

Myers, R.H. (1991). How did the modern Chinese economy develop?—a review article. *The Journal of Asian Studies, 50*(3), 604-628.

Nagata, J. (1981). In Defense of Ethnic Boundaries: The Changing Myths and Charters of Malay Identity. In C.F. Keyes (Ed.), *Ethnic change* (pp. 87-118). Seattle: University of Washington Press.

Naji, M. (2012). Learning to weave the threads of honor: understanding the value of female schooling in southern Morocco. *Anthropology & Education Quarterly, 43*(4), 372-84.

Narayan, K. (1993). How native is a “native” anthropologist?. *American anthropologist, 95*(3), 671-686.

Nash, J.C. (1993a). Maya household production in the world market: The potters of Amatenango del Valle, Chiapas, Mexico. In J.C. Nash (Ed.), *Crafts in the world market: The impact of global exchange on Middle American artisans* (pp. 127-154). Albany, NY: State University of New York Press.

Nash, J.C. (1993b). Traditional arts and changing markets in Middle America. In J.C. Nash (Ed.), *Crafts in the world market: The impact of global exchange on Middle American artisans* (pp. 1-25). Albany, NY: State University of New York Press.

National Bureau of Statistics and State Ethnic Affairs Commission. (1990). *Tabulation on nationalities of 1990 population census of China*. Retrieved from http://www.stats.gov.cn/tjsj/pcsj/rkpc/dscrkpc/

National Bureau of Statistics and State Ethnic Affairs Commission. (2003). *Tabulation on nationalities of 2000 population census of China*. Retrieved from http://www.stats.gov.cn/tjsj/ndsj/renkoupucha/2000pucha/pucha.htm

National Bureau of Statistics of China. (2012). *Tabulation on the 2010 population census of the People's Republic of China.* Retrieved from http://www.stats.gov.cn/english/Statisticaldata/CensusData/rkpc2010/indexch.htm

National Bureau of Statistics of China. (2015). *China statistical yearbook*. Beijing: China Statistics Press.

National Ethnic Affairs Commission of the People's Republic of China. (2014.) *The first batch of national representative ethnic villages*. Retrieved from http://wap.seac.gov.cn/seac/xwzx/201409/1002845.shtml

Nee, V. (1992). Organizational dynamics of market transition: Hybrid forms, property rights, and mixed economy in China. *Administrative Science Quarterly, 37*(1), 1-27.

Nee, V. (2000). The role of the state in making a market economy. *Journal of Institutional and Theoretical Economics, 156*(1), 64-88.

Nelson, L. (2006). "Artesanía", mobility and the crafting of indigenous identities among Purhépechan women in Mexico. *Journal of Latin American Geography*, 51-77.

Newman, A., & Mclean, F. (1998). Heritage builds communities: The application of heritage resources to the problems of social exclusion. *International Journal of Heritage Studies, 4*(3-4), 143-153.

Nie, Y., & Liu, F. (2011). Jixiu yu shouxiu gongyi de chuancheng fenxi [An analysis of inheritance between machine embroidery and manual embroidery]. *Journal of Guizhou University for Nationalities (Philosophy and Social Science), 5,* 12-17.

Nitzky, W. (2013). Community empowerment at the periphery? Participatory approaches to heritage protection in Guizhou, China. In T. Blumenfield & H. Silverman (Eds.), *Cultural heritage politics in China* (pp. 205-232). New York, NY: Springer New York.

Northouse, P.G. (2015). *Leadership: Theory and Practice*. London: Sage Publications.

Nugent, S. (2007). Some reflections on anthropological structural Marxism. *Journal of the Royal Anthropological Institute, 13*(2), 419-431.

Nyiri, P. (2006). *Scenic Spots: Chinese Tourism, the State, and Cultural Authority*. Seattle: University of Washington Press.

Oakes, T. (1993). The Cultural Space of Modernity: Ethnic Tourism and Place Identity in China. *Environment and Planning: Society and Space 11*(1), 47-66.

Oakes, T. (1995). Tourism in Guizhou: The legacy of internal colonialism. In A. A. Lew & L. Yu (Eds.), *Tourism in China: Geographic, political, and economic perspectives* (pp. 203-222). Boulder: Westview Press.

Oakes, T. (1997). Ethnic tourism in rural Guizhou: Sense of place and the commerce of authenticity. In M. Picard & R. E. Wood (Eds.), *Tourism, ethnicity, and the state in Asian and Pacific societies*, (pp. 35-70). Honolulu: University of Hawai'i Press.

Oakes, T. (1998). *Tourism and modernity in China*. London: Routledge.

Oakes, T. (2006). Cultural strategies of development: Implications for village governance in China. *The Pacific Review, 19*(1), 13-37.

Oakes, T. (1999). Selling Guizhou: Cultural development in an era of marketization. In H.J. Hendrischke & C. Feng (Eds.), *The political economy of China's provinces: Comparative and competitive advantage* (pp. 27-67). London: Routledge.

Oakes, T. (2016). Villagizing the city: Turning rural ethnic heritage into urban modernity in Southwest China. *International Journal of Heritage Studies, 22*(10), 751-765.

O'Brian, R. (1999). Who weaves and why? Weaving, loom complexity, and trade. *Cross-Cultural Research, 33*(1), 30-42.

Ogbu, J.U. (1982). Cultural discontinuities and schooling. *Anthropology and Education Quarterly, 13*(4), 290-307.

Ogbu, J.U. (1987) Variability in minority school performance: A problem in search of an explanation. *Anthropology and Education Quarterly, 18*(4), 312-334.

Olsen, K. (2002). Authenticity as a concept in tourism research: The social organization of the experience of authenticity. *Tourist Studies, 2*(2), 159-182.

Olwig, M.F., & Gough, K.V. (2013). Basket weaving and social weaving: young Ghanaian artisans' mobilization of resources through mobility in times of climate change. *Geoforum, 45*, 168-177.

Ortner, S.B. (1984). Theory in anthropology since the sixties. *Comparative studies in society and history*, *26*(1), 126-166.

Ortner, S.B. (1995). Resistance and the problem of ethnographic refusal. *Comparative Studies in Society and History, 37*(1), 173-193.

Ortner, S.B. (2001). Specifying agency the comaroffs and their critics. *Interventions, 3*(1), 76-84.

Page, S. (2011). *Tourism management*. Abingdon: Routledge.

Pan, G. (1990). *Zhongguo Miaozu fengqing* [Chinese Miao Customs]. Guiyang: Guizhou Minorties Press.

Paraskevaidis, P., & Andriotis, K. (2015). Values of souvenirs as commodities. *Tourism Management, 48*, 1-10.

Parikh, A., & Thorbecke, E. (1996). Impact of rural industrialization on village life and economy: a social accounting matrix approach. *Economic Development and Cultural Change, 44*(2), 351-377.

Parker, R. (2010). *The subversive stitch: Embroidery and the making of the feminine*. London: I.B. Tauris.

Parker, R., & Pollock, G. (2013). *Old mistresses: Women, art and ideology*. London: I.B. Tauris.

Parnwell, M.J. (1993). Tourism and rural handicrafts in Thailand. In V. T. King, & M. Parnwell (Eds.), *Tourism in South-East Asia* (pp. 252-275). London: Routledge.

Parsons, T. (1955). *Family, socialization and interaction process.* Estados Unidos: The Free Press.

Parzer, M. &Kwok, K. (2013). Commodifying Ethnicity: On Marketing Strategies in Immigrant Cultural Economies in Vienna. *Journal of Intercultural Studies, 34*(3), 262-279.

Passias, E.J., Sayer, L., & Pepin, J.R. (2016). Who experiences leisure deficits? mothers' marital status and leisure time. *Journal of Marriage and Family, 79*(4), 1001-1022.

Pearce, D.G. (1992). Alternative tourism: Concepts, classifications, and questions. In Smith, V.L., Eadington,W.R (Eds.), *Tourism Alternatives: Potentialsand Problems in the Development of Tourism* (pp. 15-30). Philadelphia: University of Pennsylvania Press.

Peng, N. (2002). Putting-out system and development of the village handicraft in modern China. *Journal of Historical Science, 2*, 93-101.

Peng, Y., & Liu Y. (2018). Guizhou minzu wenhua pingpai chuangjian zouyi [On the establishment of Guizhou national culture brand: Taking colourful Guizhou as an example]. *Guizhou Ethnic Studies, 39*(10), 86-89.

Peng, Z. (2013). *Shougong* [Handicraft]. *National Arts, 4,* 44-49.

Phillips, R.B., & Steiner, C.B. (1999). *Unpacking culture art and commodity in colonial and postcolonial worlds*. Berkeley, CA: University of California Press.

Picard, M. (1997). Cultural tourism, nation-building, and regional culture: The making of a Balinese identity. In M. Picard & Wood, R. E. (Eds.), *Tourism, ethnicity, and the state in Asian and Pacific societies* (pp. 181-214). Honolulu: University of Hawai'i Press.

Picard, M., & Wood, R.E. (1997). *Tourism, ethnicity, and the state in Asian and Pacific societies*. Honolulu, Hawaii: University of Hawai'i Press.

Pieters, J. (2000). New historicism: Postmodern historiography between narrativism and heterology. *History and Theory, 39*(1), 21-38.

Pike, K. L., Headland, T. N., & Harris, M. (Eds.). (1990). *Emics and etics: The insider/outsider debate*. Landon: Sage Publications.

Pineda, J. (2000). Partners in women-headed households: Emerging masculinities? *The European Journal of Development Research, 12*(2), 72-92.

Pitcher, B. (2014). *Consuming race*. Abingdon: Routledge.

Population Census Office and National Bureau of Statistics of China. (2012). *Zhongguo 2010 nian renkou pucha ziliao* [Tabulation on the 2010 population census of the People's Republic of China]. Beijing: China Statistics Press.

Postiglione, G., Jiao, B., & Gyatso, S. (2006). Household perspectives on school attendance in rural Tibet. *Educational Review, 58*(3), 317-337.

Postiglione, G. (1999). *China's national minority education: Culture, schooling, and development*. New York: Falmer Press.

Postiglione, G. (2014). Education and cultural diversity in multiethnic China. In Leibold, J., & Chen, Y. (Eds.), *Minority education in China: Balancing unity and diversity in an era of critical pluralism* (pp. 27-43). Hong Kong: Hong Kong University Press.

Price, S. (1988), *Primitive Art in Civilized Place*. Chicago: University of Chicago Press.

Price, S., & Price, R. (1999). *Maroon arts: Cultural vitality in the African diaspora*. Boston (Mass.): Beacon Press.

Pristash, H., Schaechterle, I., & Wood, S.C. (2009). The needle as the pen: Intentionality, needlework, and the production of alternate discourses of power. In Goggin, M.D., *Women and the material culture of needlework and textiles: 1750-1950* (pp. 13-27). Farnham: Ashgate.

Qian, M. R. & Wu, W. T. (2014). Miaozu cixiu tuan zai xiandai pidiao shippin sheji zhong de yunyong [Application of Miao Embroidery Pattern in Modern Leather Carving Decoration Design]. *Journal of Silk, 51*(11), 62-66.

Qin, J.X. (2014). Tanxi Guizhou Songtao Miaoxiu tuan yishu tezheng [Analysis on Guizhou Songtao Miao embroidery characteristics of pictorial art]. *Guizhou Ethnic Studies, 35*(4), 44-47.

Qiu, P. S. (2002). From the putting out system to the factory system: An economic and legal analysis of cotton cloth firms in Suzhou during the early Qing dynasty. *Historical Recearch, 2002*(1), 75-87.

Qin, Q., Wall, G., & Liu, X. (2011). Government roles in stimulating tourism development: A case from Guangxi, China. *Asia Pacific Journal of Tourism Research, 16*(5), 471-487.

Quizon, C.A. (2007). Costume, kóstyom, and dress: Formulations of Bagóbo ethnic identity in Southern Mindanao. *Ethnology, 46*(4), 271-288.

Rapport, N., & Overing, J. (2000). *Social and cultural anthropology. The key concepts*. London: Routledge.

Reisinger, Y., & Steiner, C.J. (2006). Reconceptualizing object authenticity. *Annals of Tourism Research, 33*(1), 65-86.

Reiter, R.R. (2011). *Toward an anthropology of women*. Delhi: Aakar Books.

Revilla, G., & Dodd, T.H. (2003). Authenticity perceptions of Talavera pottery. *Journal of Travel Research, 42*(1), 94-99.

Richards, G. (1996). *Cultural tourism in Europe*. Arnhem: ATLAS, Association for Tourism and Leisure Education.

Richards, G. (1999). *Developing and marketing crafts tourism*. Tilburg: Atlas.

Richards, G. (2000). Tourism and the world of culture and heritage. *Tourism Recreation Research, 25*(1), 9-17.

Robinson, M., & Smith, M. (2006). Politics, power and play: The shifting contexts of cultural tourism. In M.K. Smith, & M. Robinson (Eds.), *Cultural tourism in a changing world: Politics, participation and (re)presentation* (pp. 1-17). Clevedon, UK: Channel View Publications.

Rogerson, C.M. (2000). Rural handicraft production in the developing world: policy issues for South Africa. *Agrekon, 39*(2), 193-217.

Rosaldo, M.Z. (1974). Woman culture and society: A theoretical overview. In M.Z. Rosaldo & L. Lamphere (Eds.) *Woman, culture and society* (pp. 17-42). Palo Alto: Stanford University Press.

Rosaldo, R. (1988). Ethnic concentrations: The Ilongots in upland Luzon. In A.T. Rambo, K. Gillogly & K.L. Hutterer (Eds.), *Ethnic diversity and the control of natural resources in Southeast Asia* (pp. 161-171).Ann Arbor: The University of Michigan.

Rosaldo, R. (1989). *Culture & truth. The remaking of social analysis*. Boston: Beacon Press.

Roth, S. (2018). *Incorporating culture: How indigenous people are reshaping the northwest coast art industry*. Vancouver, Toronto: UBC Press.

Ruan, J., & Zhang, X. (2009). Finance and cluster-based industrial development in China. *Economic Development and Cultural Change, 58*(1), 143-164.

Rubin, W. (1984) Modernist primitivism: an introduction. In Rubin, W., *Primitivism in twentieth century art: Affinity of the tribal and the modern* (pp. 1-84). New York: Museum of Modern Art.

Rushing, W. Jackson (1995). *Native American art and the New York avant-grade: A history of cultural primitivism*. Austin, TX: University of Texas Press.

Ryan, C., & Gu, H. (2009). *Tourism in China: Destination, cultures and communities*. New York: Routledge.

Saarinen, J. (2011). Tourism development and local communities: the direct benefits of tourism to Ovahimba communities in the Kaokoland, Northwest Namibia. *Tourism Review International, 15*(1-2), 149-157.

Safran, W. (1998). Introduction: Nation, Ethnie, Region, and Religion as Markers of Identity. In W. Safran (Ed.), *Nationalism and ethnoregional identities in China* (pp. 1-8). London: Frank Cass.

Said, E.W. (1978). *Orientalism*. New York: Pantheon Books.

Salamone, F.A. (1997). Authenticity in tourism: the San Angel inns. *Annals of Tourism Research, 24*(2), 305-321.

Salazar, N.B. (2012). Community-based cultural tourism: Issues, threats and opportunities. *Journal of Sustainable Tourism, 20*(1), 9-22.

Salzman, P. C. (2002). On reflexivity. *American Anthropologist, 104*(3), 805-811.

Sandell, R. (1998). Museums as agents of social inclusion. *Museum Management and Curatorship, 17*(4), 401-418.

Sautman, B. (1999). Ethnic law and minority rights in China: Progress and constraints. *Law & Policy, 21*(3), 283-314.

Schein, L. (1997). Gender and internal orientalism in China. *Modern China, 23*(1), 69-98.

Schein, L. (2000). *Minority rules: The Miao and the feminine in China's cultural politics*. Durham: Duke University Press.

Schein, L. (2006). Negotiating scale: Miao women at a distance. In T. Oakes & L. Schein (Eds). *Translocal China: Linkages, identities and the reimagining of space* (pp. 213-237). Abingdon: Routledge.

Scheyvens, R. (2003). *Tourism for development: Empowering communities*. Harlow, England: Prentice Hall.

Schor, J.B (1993). *The overworked American: The unexpected decline of leisure*. New York: Basic Books.

Scott, G.M. (1990). A resynthesis of the primordial and circumstantial approaches to ethnic group solidarity: towards an explanatory model. *Ethnic and Racial Studies, 13*(2), 147-171.

Scott, J.W. (1999). *Gender and the politics of history*. New York: Columbia University Press.

Sdrali, D., Goussia-Rizou, M., & Kiourtidou, P. (2015). Residents' perception of tourism development as a vital step for participatory tourism plan: a research in a Greek protected area. *Environment, Development and Sustainability, 17*(4), 923-939.

Selwyn, T. (1996). *The tourist image: Myths and myth making in tourism*. Chichester: John Wiley.

Shah, A., & Patel, R. (2017). Problems and challenges faced by handicraft artisans. *Voice of Research, 6*(1), 57-61.

Shani, A., & Pizam, A. (2012). Community participation in tourism planning and development. In M. Uysal, R.R. Perdue, & M.J. Sirgy (Eds.), *Handbook of tourism and quality-of-life research: Enhancing the lives of tourists and residents of host communities* (pp. 547-564). Dordrecht: Springer.

Shao, Y., & Zeng, X.Y. (1982). *Guizhou Miaozu cixiu* [Guizhou Miao embroidery]. Beijing: People's Fine Arts Publishing House.

Sharpley, R. (2018). *Tourism, tourists and society*. London: Routledge.

Sheikhi, A. (2015). The impact of ethnic tourism on gender equality: A case study of Iran's Baluchistan women. *Tourism, 63*, 161-174.

Shen, H., Wang, Q., Ye, C., & Liu, J.S. (2018). The evolution of holiday system in China and its influence on domestic tourism demand. *Journal of Tourism Futures, 4*(2), 139-151.

Shen, J., & Huang, Y. (2003). The working and living space of the 'floating population' in China. *Asia Pacific Viewpoint, 44*(1), 51-62.

Shen, M. (2012). *Zhongjian didai: Xinan zhongguo de shehui xingbie zuxing yu rentong* [Middle ground gender ethnicity and identity in Southwest China]. Beijing: The Commercial Press.

Shepherd, R. (2002). Commodification, culture and tourism. *Tourist Studies, 2*(2), 183-201.

Sherif, B. (2001). The ambiguity of boundaries in the fieldwork experience: Establishing rapport and negotiating insider/outsider status. *Qualitative inquiry, 7*(4), 436-447.

Shi, Q. G. (1986). *Xiangxi Miaozu diaocha baogao* [An ethnographic report on the Miao people in the Xiangxi]. Changsha: Hunan People's *Publishing* House.

Shiner, L. (1994). "Primitive fakes," "tourist art," and the ideology of authenticity. *The Journal of Aesthetics and Art Criticism, 52*(2), 225-234.

Silberstein, R. (2015). Eight scenes of Suzhou: Landscape embroidery, urban courtesans, and nineteenth-century Chinese women's fashions. *Late Imperial China, 36*(1), 1-52.

Silverman, E.K. (1999). Tourist art as the crafting of identity in the Sepik River (Papua New Guinea). In Phillips, R.B., & Steiner, C.B. (1999). *Unpacking culture art and commodity in colonial and postcolonial worlds* (pp.51-66). Berkeley, CA: University of California Press.

Silverman, H. & Fairchild Ruggles, D. (Eds.). (2008) *Cultural heritage and human rights*. New York: Springer.

Simpson, M. C. (2007). An integrated approach to assess the impacts of tourism on community development and sustainable livelihoods. *Community development journal, 44*(2), 186-208.

Sinclair, M.T. (1998). Tourism and economic development: A survey. *The Journal of Development Studies, 34*(5), 1-51.

Sirika, B. (2008). Socio-economic status of handicraft women among Macca Oromo of West Wallaga, Southwest Ethiopia. *Ethiopian Journal of Education and Sciences, 4*(1), 1-15.

Smith, A.D. (2009). *Ethno-symbolism and nationalism: A cultural approach*. Abingdon: Routledge.

Smith, B.H. (1988). *Contingencies of value: Alternative perspectives for critical theory*. Cambridge, Mass: Harvard University Press.

Smith, L. (2006). *Uses of Heritage*. London: Routledge.

Smith, L., Morgan, A., & Meer, A.V. (2003). Community-driven research in cultural heritage management: The Waanyi women's history project. *International Journal of Heritage Studies, 9*(1), 65-80.

Smith, M.K. (2006). *Cultural tourism in a changing world: Politics, participation and (re)presentation*. Clevedon, UK: Channel View Publications.

Smith, R.K., & Olson, L.S. (2001). Tourist shopping activities and development of travel sophistication. *Visions in Leisure and Business*, *20*(1), 3.

Snavely, A.E. (2004). A review of the Chinese national minority education program. *Stanford Journal of East Asian Affairs, 4*(1), pp.35-41.

Snellman, A., & Ekehammar, B. (2005). Ethnic hierarchies, ethnic prejudice, and social dominance orientation. *Journal of Community & Applied Social Psychology, 15*(2), 83-94.

Snowden, D. J., & Boone, M. E. (2007). A leader's framework for decision making. *Harvard business review, 85*(11), 68.

Snyder, R., Williams, D., & Peterson, G. (2003). Culture loss and sense of place in resource valuation: economics, anthropology and indigenous cultures. In S. Jentoft (Eds.), *Indigenous peoples: Resource management and global rights* (pp. 107- 123). Utrecht: Eburon Publishers.

Sofield, T. H. B. (2003). *Empowerment for sustainable tourism development*. Kidlington: Elsevier Science.

Sofield, T., & Li, F.M. (1998). Tourism development and cultural policies in China. *Annals of Tourism Research, 25*(2), 362-392.

Sofield, T., & Li, S. (2011). Tourism governance and sustainable national development in China: A macro-level synthesis. *Journal of Sustainable Tourism, 19*(4-5), 501-534.

Spooner, B. (1986). Weavers and dealers: The authenticity of an oriental carpet. In A. Appadurai (Ed.), *The social life of things: Commodities in cultural perspective* (pp. 195-235). Cambridge: Cambridge University Press.

Stasch, R. (2014). Primitivist tourism and romantic individualism: On the values in exotic stereotypy about cultural others. *Anthropological theory, 14*(2), 191-214.

State Council Information Office. (2010). *"Duocai Guizhou" shangbiao quanmian zhuce zhaoshang xinwen fabuhui* ["Colorful Guizhou" brand launch and investment attraction]. Retrieved from http://www.scio.gov.cn/xwfbh/qyxwfbh/document/818144/818144.htm

Statistical Bureau of Guizhou Province. (2000).*Guizhou tongji nianjian 2000* [Guizhou statistical yearbook 2000]. Beijing: China Statistics Press.

Statistical Bureau of Guizhou Province. (2008).*Guizhou tongji nianjian 2008* [Guizhou statistical yearbook 2008]. Beijing: China Statistics Press.

Stefano, M. L., Davis, P., & Corsane, G. (Eds.), (2014*). Safeguarding intangible cultural heritage (Vol. 8)*. Suffolk: Boydell & Brewer Ltd.

Steiner, C.B. (1994). *African art in transit*. New York, NY: Cambridge University.

Stephen, L. (1991). Culture as a resource: Four cases of self-managed indigenous craft production in Latin America. *Economic Development and Cultural Change, 40*(1), 101-130.

Stephen, L. (1993). Weaving in the fast lane: Class, ethnicity, and gender in Zapotec craft commercialization. In J. Nash (Ed.), *Crafts in the world market: The impact of global exchange on Middle American artisans* (pp. 25-58). Albany: State University of New York Press.

Stephen, L. (2005a). Women's weaving cooperatives in Oaxaca: An indigenous response to neoliberalism. *Critique of Anthropology, 25*(3), 253-278.

Stephen, L. (2005b). *Zapotec women: Gender, class, and ethnicity in globalized Oaxaca*. Durham, NC: Duke University Press.

Storr, V. (2013). *Understanding the culture of markets*. London: Routledge.

Stronza, A. (2001). Anthropology of tourism: Forging new ground for ecotourism and other alternatives. *Annual Review of Anthropology, 30*(1), 261-283.

Sturgeon, J.C. (2010). Governing minorities and development in Xishuangbanna, China: Akha and Dai rubber farmers as entrepreneurs. *Geoforum, 41*(2), 318-328.

Su, M.M., Long, Y., Wall, G., & Jin, M. (2016). Tourist-community interactions in ethnic tourism: Tuva villages, Kanas Scenic Area, China. *Journal of Tourism and Cultural Change, 14*(1), 1-26.

Su, M.Z. (2009). *China's rural development policy: Exploring the "new socialist countryside"*. Boulder: Lynne Reinner Publishers.

Su, X., & Teo, P. (2009). *The politics of heritage tourism in China: A view From Lijiang*. London: Routledge.

Lijiang. London: Routledge.

Subramaniam, G., Tan, P., Maniam, B., & Ali, E. (2013). Workplace flexibility, empowerment and quality of life. *Procedia - Social and Behavioral Sciences, 105*, 885-893.

Sudarkasa, N. (1986). "The status of women" in indigenous African societies. *Feminist Studies, 12*(1), 91.

Sun, H.T. (2002, November 1). Zhang Tingzhen: xiu chu wucai Miao xiang lai [Embroidering a colourful Miao village]. The *People's Daily*. Retrieved from http://www.people.com.cn/GB/shizheng/252/8956/8959/20021101/855860.html

Sun, J., & Liao J. (2016). Lüyou canyu dui shaoshu minzu liangxin jiating fentong de yingxiang [Impacts of tourism participatation on the gender divison of labour of ethnic minority families]. *Thinking, 42*(1), 105-110.

Sung, Y.W. (2007). Made in China: from world sweatshop to a global manufacturing center? *Asian Economic Papers, 6*(3), 43-72.

Swain, M.B. (1993). Women producers of ethnic arts. *Annals of Tourism Research, 20*(1), 32-51.

Swanson, K.K., & Timothy, D.J. (2012). Souvenirs: Icons of meaning, commercialization and commoditization. *Tourism Management, 33*(3), 489-499.

Swidler, A. (1986). Culture in action: Symbols and strategies. *American Sociological Review*, 273-286.

Taijiang County Annals Compilation Committee. (1994). *Taijiang xianzhi* [Taijiang County Annals]. Guiyang: Guizhou People's Publishing House.

Tang, S., Selvanathan, E.A., & Selvanathan, S. (2008). Foreign direct investment, domestic investment and economic growth in China: A time series analysis. *World Economy, 31*(10), 1292-1309.

Tapp, N. (1989). Hmong religion. *Asian Folklore Studies, 4*8(1), 59-94.

Tapp, N. (2000). Ritual relations and identity: Hmong and others. In A. Turton (Ed.) *Civility and savagery: Social identity in Tai states* (pp. 84-103). Richmond, Surrey: Curzon Press.

Tapp, N. (2002). In defence of the archaic: A reconsideration of the 1950s ethnic classification project in China. *Asian Ethnicity, 3*(1), 63-84.

Taylor, J.P. (2001). Authenticity and sincerity in tourism. *Annals of Tourism Research, 28*(1), 7-26.

Theodossopoulos, D. (2012). Indigenous attire, exoticization, and social change: dressing and undressing among the Emberá of Panama. *Journal of the Royal Anthropological Institute, 18*(3), 591-612.

Theodossopoulos, D. (2013). Introduction: Laying claim to authenticity: Five anthropological dilemmas. *Anthropological Quarterly, 86* (2), 337-360.

Tice, K.E. (1995). *Kuna crafts, gender, and the global economy*. Austin: University of Texas Press.

Tilley, C. (2006).Theoretical perspectives. In C. Tilley, P. Spyer, W. Keane, S. Küchler, & M. Rowlands (Eds.), *Handbook of material culture* (pp. 7-12). London: Sage Publications.

Timothy, D.J. (1999). Participatory planninga view of tourism in Indonesia. *Annals of Tourism Research, 26*(2), 371-391.

Toops, S. (1993). Xinjiang's handicraft industry. *Annals of Tourism Research, 20*(1), 88-106.

Torii, R. (2009). *Miaozu diaocha baogao* [Investigation report of Miao nationality]. Guiyang: Guizhou University Press.

Tosun, C. (2000). Limits to community participation in the tourism development process in developing countries. *Tourism Management, 21*(6), 613-633.

Tsung, L.T. (2009). *Minority languages, education and communities in China*. Basingstoke: Palgrave Macmillan.

Unger, J. (1997). Not quite Han: The ethnic minorities of China's Southwest. *Critical Asian Studies, 29*(3), 67-78.

Upton, D. (1996). Ethnicity, authenticity, and invented traditions. *Historical Archaeology, 30*(2), 1-7.

Upton, J.L. (1995). Home on the grasslands? Tradition, modernity, and the negotiation of identity by Tibetan intellectuals in the PRC. In M.J. Brown (Ed.), *Negotiating ethnicities in China and Taiwan* (pp. 98-124). Berkeley: Institute of East Asian Studies, University of California Center for East Asian Studies.

Urry, J. (1990). *The tourist gaze: Leisure and travel in contemporary societies*. London: Sage.

Urry, J. (1992). The tourist gaze "revisited". *American Behavioral Scientist, 36*(2), 172-186.

Vadakepat, D.V., & Al Khateeb, F. (2012). Globalizing rural markets: evidence from handmade traditional product markets. *Global Journal of Business Research, 6*(4), 35-43.

Van Haute, B. (2008). African tourist art as tradition and product of the postcolonial exotic. *International Journal of African Renaissance Studies, 3*(2), 21-38.

Veblen, T. [1899] 2009. *Theory of the leisure class*. New York: Oxford University Press.

Verbole, A. (2000). Actors, discourses and interfaces of rural tourism development at the local community level in Slovenia: Social and political dimensions of the rural tourism development process. *Journal of sustainable tourism, 8*(6), 479-490.

Vogel, S. (1989). *Art/Artefact: African Art in Anthropological Collections*. New York: Prestel.

Waldinger, R., Aldrich, H.E., & Ward, R. (1990). *Ethnic entrepreneurs: Immigrant business in industrial societies*. Newbury Park: Sage.

Waldron, S., Brown, C., & Longworth, J. (2006). State sector reform and agriculture in China. *The China Quarterly, 186*, 277.

Wall, D. (1993). China's economic reform and opening-up process: The role of the special economic zones. *Development Policy Review, 11*(3), 243-260.

Walsh, E.R. (2001). The Mosuo – Beyond the Myths of Matriarchy: Gender Transformation and Economic Development (PhD dissertation). Pennsylvania: Temple University.

Walsh, E.R., & Swain, M.B. (2004). Creating modernity by touring paradise: Domestic ethnic tourism in Yunnan, China. *Tourism Recreation Research, 29*(2), 59-68.

Wan, M. G. (2007). Ethnic diversity and citizenship education in the People's Republic of China. In James, A. Banks (Eds.), *Diversity and citizenship education: Global perspectives* (pp. 355-376). San Francisco: Jossey-Bass.

Wang, C. (2012). *Piaoyi de shikong: dangdai zhongguo shaoshu minzu de jingji shenghuo* [Space time floating: Economic life of ethnic minorities in contemporary China]. Beijing: Social Science Academic Press.

Wang, C.W. (2008). *Wang Chaowen Wenji: Miaoxue Yanjiu yu Miaozu Fazhan* [Collected Works of Wang Chaowen: Miao studies and development]. Guiyang: *Guizhou* People's Press.

Wang, C., & Xu, H. (2014). The role of local government and the private sector in China's tourism industry. *Tourism Management, 45*, 95-105.

Wang, H. (1995). *Miaozu nvxing wenhua* [Miao women's culture]. Beijing: Peking University Press.

Wang, H., Yang, Z., Chen, L., Yang, J., & Li, R. (2010). Minority community participation in tourism: A case of Kanas Tuva villages in Xinjiang, China. *Tourism Management, 31*(6), 759-764.

Wang, M. (1998). Qiangzu funv fushi [Qiang ethnic women dress]. *Taiwan Bulletin of the Institute of History and Philology Academia Sinica*, 841-885.

Wang, N. (1999). Rethinking authenticity in tourism experience. *Annals of Tourism Research, 26*(2), 349-370.

Wang, R. (2011). Guizhou Miaozu fushi shenmei qianxi (The aesthetic analysis of Miao costumes in Guizhou). *Journal of Qiannan Normal College of Nationalities, 31*(2), 32-35.

Wang, Y., & Bramwell, B. (2012). Heritage protection and tourism development priorities in Hangzhou, China: A political economy and governance perspective. *Tourism Management, 33*(4), 988-998.

Wang, Y., & Wall, G. (2007). Administrative arrangements and displacement compensation in top-down tourism planning—A case from Hainan Province, China. *Tourism Management, 28*(1), 70-82.

Wardlow, H. (2004). Anger, Economy, and Female Agency: Problematizing "Prostitution" and "Sex Work" among the Huli of Papua New Guinea. *Signs, 29*(4), 1017-1040.

Wei, X. (2009). A beautiful existence: visiting the homeland of tin embroidery. *Guizhou Daily*, p. 11. (in Chinese).

Weiner, A.B., & Schneider, J. (1989). *Cloth and Human Experience*. Washington: Smithsonian Institution.

Weinreich, P., & Saunderson, W. (Eds.) (2003). *Analysing identity: cross-cultural, societal and clinical contexts*. Hove: Routledge.

Weng, J. (1995). Daolun [Introduction]. In Guizhou Institute of Ethnic Minorities, *Guizhou shaoshu minzu funü wenti yanjiu* [Studies on Guizhou Ethnic Women] (pp. 4-18). Guiyang: Guizhou Minorities Press.

Wenger, E. (1999). *Communities of practice: Learning, meaning, and identity*. Cambridge: Cambridge University Press.

Wetherell, M. (2010). The field of identity studies. In M. Wetherell & C.T. Mohanty (Eds.), *The Sage handbook of identities*. London: Sage Publications.

Wheeler, C. (1921). *The development of embroidery in America*. New York: Harper & Brothers.

Wherry, F.F. (2006). The social sources of authenticity in global handicraft markets: Evidence from northern Thailand. *Journal of Consumer Culture, 6*(1), 5-32.

Wherry, F.F. (2008). *Global markets and local crafts: Thailand and Costa Rica compared*. Baltimore, MD: Johns Hopkins University Press.

White, G. (1993). *Riding the tiger: The politics of economic reform in post-Mao China*. London: Macmillan Publishers Ltd.

Wilk, R. (2007). *Economies and cultures*. New York: Routledge.

Wilkins, H. (2010). Souvenirs: What and why we buy. *Journal of Travel Research, 50*(3), 239-247.

Wilson, S., Fesenmaier, D. R., Fesenmaier, J., & Van Es, J. C. (2001). Factors for success in rural tourism development. *Journal of Travel research, 40*(2), 132-138.

Wolf, E. (2001). Is the "peasantry" a class? In E. Wolf & S. Silverman (Eds.), *Pathways of power: Building an anthropology of the modern world* (pp. 252-259). Berkeley, CA: University of California Press.

Wong, C.Y. (2003). *Participation and empowerment: An ethnography of Miao women in rural China* (PhD dissertation). Hong Kong: Hong Kong University of Science and Technology.

Wood, S. (2009). Women's work or creative work? Embroidery in New South Wales high schools. *History of Education, 38*(6), 779-789.

Wood, W.W. (2000). Flexible Production, Households, and Fieldwork: Multisited Zapotec Weavers in the Era of Late Capitalism. *Ethnology, 39*(2), 133.

Woodward, K. (2008). Hanging out and hanging about: Insider/outsider research in the sport of boxing. *Ethnography, 9*(4), 536-60.

Woon, Yuen-Fong. (1985). Ethnic identity and ethnic boundaries: The Sino-Vietnamese in Victoria, British Columbia. *Canadian Review of Sociology, 22*(4), 534-558.

World Tourism Organization, China National Tourism Administration, and Guizhou Province Tourism Bureau. (2004). *Guizhousheng luyou fazhan zongti guihua* [Guizhou provincial tourism development master plan]. Guiyang: Guizhou People's Press.

Wu, D. (2013). Selling a diverse nation: Ethnic minorities as portrayed by contemporary Chinese photographer Chen Man. *The Collegiate Journal of Art, 10*, 31-44.

Wu, J., & Wang, M.Y. (2012). Ethnic migrant workers and emerging ethnic division in China's urban labor market. *Asian and Pacific Migration Journal, 21*(4), 483-507.

Wu, R.Z. (2008). *Miaozu Tongshi* [The history of the Miao]. Beijing: Publishing House of Minority Nationalities.

Wu, X. F. (1990). Lüelun Miaozu zhixi [Research on Miao subgroups]. *Journal of South-Central University for Nationalities (Humanities and Social Sciences), 3*, 87-91.

Wu, Y., Jin, D., & Bender, M. (2012). *Hmong oral epics*. Guiyang: Guizhou Publishing Group.

Wu, Z.G. (1990). Chuan zai shen shang de shi su [Wearing history on costumes]. *Guizhou Culture and History, 6*, 132-134.

Xia, Q., & Simmons, C. (2004). The determinants of labour-time allocation between farm and off-farm work in rural China: The case of Liaoning Province. *Journal of Chinese Economic and Business Studies, 2*(2), 169-184.

Xie, P.F. (2010). *Authenticating ethnic tourism*. Bristol: Channel view publications.

Xing, L. (2004). *Rhetoric of the Chinese cultural revolution: the impact on Chinese thought, culture, and communication*. Univ of South Carolina Press.

Xu, L. (2011, September 14). Guizhou special: Protecting the cultures of Guizhou's ethnic groups. *The China Daily*. Retrieved from http://www.chinadaily.com.cn/cndy/2011-09/14/content_13680493.htm

Xue, D. (1996). *Miaoxiu chutan* [Research on Miao embroidery]. *Ethnic Art Studies, 1*, 58-67.

Xue, L., & Li, S., (2014). Duocai Guizhou wenhua pingpai yanjiu zongshu [Review on the brand of colourful Guizhou]. *Guizhou Ethnic Studies, 35*(06), 39-42.

Yan, E.Q. (1993). *Yunnan Miaozu chuantong wenhua de bianqian* [Culture changes of Yunnan Miao ethnic minority]. Kunming: Yunnan People's Press.

Yan, G., & Santos, C.A. (2009). 'China, forever': Tourism discourse and self-orientalism. *Annals of Tourism Research, 36*(2), 295-315.

Yan, H., & Bramwell, B. (2008). Cultural tourism, ceremony and the state in China. *Annals of Tourism Research, 35*(4), 969-989.

Yanagisako, S. (1987). Mixed metaphors: Native and anthropological models of gender and kinship domains. In J.F. Collier & S.J. Yanagisako, *Gender and kinship: Essays toward a unified analysis* (pp. 86-118). Stanford (California): Stanford University Press.

Yang, C.G. (1997). *Miaozu fushi: fuhao yu xiangzheng* [Miao costume: symbol and representation]. Guiyang: Guizhou People's Press.

Yang, L. (2011). Ethnic tourism and cultural representation. *Annals of Tourism Research, 38*(2), 561-585.

Yang, L. (2012). Impacts and challenges in agritourism development in Yunnan, China. *Tourism Planning & Development, 9*(4), 369-381.

Yang, L., & Wall, G. (2008). Ethnic tourism and entrepreneurship: Xishuangbanna, Yunnan, china. *Tourism Geographies, 10*(4), 522-544.

Yang, L., & Wall, G. (2009). Authenticity in ethnic tourism: domestic tourists' perspectives. *Current Issues in Tourism, 12*(3), 235-254.

Yang, L., & Wall, G. (2014). *Planning for ethnic tourism*. Farnham: Ashgate Publishing Limited.

Yang, L., Wall, G., & Smith, S.L.J. (2008). Ethnic tourism development: Chinese government perspectives. *Annals of Tourism Research, 35*(3), 751-771.

Yang, W. X. (2009). *Guizhou Miaozu kao* [Historical research on the Guizhou Miao]. Guiyang: Guizhou University Press.

Yang, Y. (2005, Sepetember 23). Sheng Wenhuating, Lüyouju juban zuotanhui: Duocai Guizhou feng zhuda wenhua pai bijiao [Guizhou provincial department of cultural and tourism promoted colourful Guizhou tourism brand]. *Guizhou City News.*

Yang, Y. (2018) Miaozu cixiu zai xiandai fuzhuang sheji Zhong de yinyong yu kaifa [Application and development of Miao embroidery in modern clothing design]. *Textile Dyeing and Finishing Journal, 40*(5), 50-52.

Yang, Z. (1997). Qiandongnan Miaozu shequ bianqian taishi [Changes on Miao communities of Qqiandongnan]. *Journal of Southwest Minzu University (Humanities and Social Science), 4*, 19-25.

Yang, Z. Q. (2010). From Miao to Miaozu - Alterity in the formation of modern ethnic groups. *Hmong Studies Journal, 10*(1), 1-28.

Yang, Z.W. (1998). *Miaozu fushi wenhua* [Miao Traditional Costume]. Guiyang: Guizhou Minorities Press.

Yao, S. (2006). On economic growth, FDI and exports in China. *Applied Economics, 38*(3), 339-351.

Ye, J., Wu, H., Rao, J., Ding, B., & Zhang, K. (2016). Left-behind women: Gender exclusion and inequality in rural-urban migration in China. *The Journal of Peasant Studies, 43*(4), 910-941.

Yi, L. (2008). *Cultural exclusion in China: State education, social mobility and cultural difference*. Oxford: Routledge.

Ying, T., & Zhou, Y. (2007). Community, governments and external capitals in China's rural cultural tourism: A comparative study of two adjacent villages. *Tourism Management, 28*(1), 96-107.

Yu, J. (2014). Wenhua chanye beijing xia “Duocai Guizhou” wenhua pingpai de neihan yanjiu [On the implications of the cultural brand—“multi-colour Guizhou” in the context of cultural industry]. *Journal of Guizhou Minzu University (Philosophy and Social Science), 5,* 104-109.

Zang, X. (1998). Ethnic representation in the current Chinese leadership. *The China Quarterly, 153*, 107-127.

Zeng, L. (2005). Wode fuqing Zeng Xianyang [My father Zeng Xianyang]. *China’s Ethnic Groups, 7*, 34-39.

Zeng, L., & Zeng, X. (2017). *Ethnic Miao embroidery : the Zeng's collection and appreciation*. Guiyang: Guizhou People's Press.

Zhang, D., & Liu, B. (2013). Dangdai shaoshu minzu shougongyi jishu bianqian zhong de wenhua xuanze fenxi [Analysis on culture choices in the technological change of contemporary minority's handcraft: taking Miao's embroidery as an example]. *Social Science, 4*, 66-80.

Zhang, G., Pine, R., & Zhang, H. (2000). China's international tourism development: present and future. *International Journal of Contemporary Hospitality Management, 12*(5), 282-290.

Zhang, H., & Chen, L. (2014). Dui Guizhou cixiu lüyou shangping kaifa de jidian sikao [Reflections on the development of Guizhou embroidery tourism products]. *Foreign Economic Relations & Trade, 9*, 66-68.

Zhang, H.Q., Chong, K., & Ap, J. (1999). An analysis of tourism policy development in modern China. *Tourism Management, 20*(4), 471-485.

Zhang, S. (2012). Guizhou shaoshu minzu cixiu wenhua chanye de kaifa [Embroidery culture industry development of national minority in Guizhou]. *Guizhou Ethnic Studies, 33*(2), 54-58.

Zhang, W. (2011). Zhongguo huji zhidu gaige defang Shijian de shikong yanjing moshi ji qi qishi [Temporal and spatial evolution models in local reform in household registration system and their implications]. *Population Research, 35*(7), 71-80.

Zhang, W. & Yang, Q. (2013, March 8). Guizhou nü daibiao huyu guanzhu minzu wenhua [Miao National People's Congress Deputy from Guizhou Advocates to Protect Ethnic Culture]. *The People's Daily.* Retrieved from http://politics.people.com.cn/GB/n/2013/0308/c70731-20728519.html

Zhang, X. (1997). *Xijiang Miaozu funü koushu shi yanjiu* [Research of oral history of the Miao women at Xijiang]. Guiyang: Guizhou People Publishing House.

Zhang, X. (2009). Interpreting needle work from a gender perspective: femininity and self-esteem - The Southeast Guizhou Miao. In University of Hawai'i Art Gallery, *Writing with thread: Traditional textiles of southwest Chinese minorities: A special exhibition from the collection of Huang Ying Feng and the Evergrand Art Museum in Taoyuan, Taiwan* (pp. 99-111). Honolulu: University of Hawai'i Art Gallery.

Zhao, J. (2013). *The Chinese fashion industry: An ethnographic approach*. London: Bloomsbury Academic.

Zhao, W. (2009). The nature and roles of small tourism businesses in poverty alleviation: Evidence from Guangxi, China. *Asia Pacific Journal of Tourism Research, 14*(2), 169-182.

Zhao, Z. (2018). Knowledge and power: the interface between religion and education in China. *Cambridge Journal of Education, 48*(2), 141-156.

Zhao, Z., & Postiglione, G.A. (2010). Representations of ethnic minorities in China's university media. *Discourse: Studies in the Cultural Politics of Education, 31*(3), 319-334.

Zhong, T. (2010). *Miao xiu Miao jing* [Miao embroidery and brocade]. Guiyang: Guizhou Minority Press.

Zhong, Z. P. (2005*). Lvyou Shangpin* [Tourism Commodity]. Beijing: China Travel & Tourism Press.

Zhou, J. (2003). Keys to women's liberation in Communist China: An historical overview. *Journal of International Women's Studies, 5*(1), 67-77.

Zhou, M. (2001). The politics of bilingual education and educational levels in ethnic minority communities in China. *International Journal of Bilingual Education and Bilingualism, 4*(2), 125-149.

Zhu, X. (2012). Understanding China's growth: Past, present, and future. *Journal of Economic Perspectives, 26*(4), 103-24.

Zhu, Y. (2012). Performing heritage: Rethinking authenticity in tourism. *Annals of Tourism Research, 39*(3), 1495-1513.

Zweig, D. (1997). *Freeing China's farmers: Rural restructuring in the reform era*. New York: M.E. Sharpe.